EMC TEST REPORT

For

CHROMATEQ SARL

01H

Test Model: CLUB DALI

Prepared for	:	CHROMATEQ SARL
Address	:	191 Allee de Lauzaard – Bat.B, Rdc 1, 34980 Saint Gely du Fesc, France
Prepared by	:	Shenzhen LCS Compliance Testing Laboratory Ltd.
Address	:	Room 101, 201, Building A and Room 301, Building C, Juji Industrial Park, Yabianxueziwei, Shajing Street, Bao'an District, Shenzhen, Guangdong, China
Tel	:	+(86) 0755-82591330
Fax	:	+(86) 0755-82591332
Web	:	www.lcs-cert.com
Mail	:	webmaster@lcs-cert.com
Date of receipt of test sample	:	July 07, 2026
Number of tested samples	:	1
Serial number	:	Prototype
Date of Test	:	July 07, 2026-September 04, 2026
Date of Report	:	September 08, 2026

DRAFT

Shenzhen LCS Compliance Testing Laboratory Ltd.
Add: Room 101, 201, Building A and Room 301, Building C, Juji Industrial Park, Yabianxueziwei, Shajing Street, Bao'an District, Shenzhen, Guangdong, China
Tel: +(86) 0755-82591330 | E-mail: webmaster@lcs-cert.com | Web: www.lcs-cert.com
Scan code to check authenticity

TEST REPORT

Report No.	:	**LCSA07066144E**
Date of Issue.....	:	September 08, 2026
Testing Laboratory Name.....	:	**Shenzhen LCS Compliance Testing Laboratory Ltd.**
Address.....	:	Room 101, 201, Building A and Room 301, Building C, Juji Industrial Park, Yabianxueziwei, Shajing Street, Bao'an District, Shenzhen, Guangdong, China
Testing Location/ Procedure.....	:	Full application of Harmonised standards ■ Partial application of Harmonised standards □ Other standard testing method □
Applicant's Name.....	:	**CHROMATEQ SARL**
Address.....	:	191 Allee de Lauzaard – Bat.B, Rdc 1, 34980 Saint Gely du Fesc, France
Test Specification		
Standard.....	:	EN 55032:2015/A1:2020 EN 55035:2017/A11:2020 EN IEC 61000-3-2:2019/A2:2024 EN 61000-3-3:2013/A2:2021/AC:2022
TRF Originator.....	:	Shenzhen LCS Compliance Testing Laboratory Ltd.
Master TRF.....	:	Dated 2011-03

Shenzhen LCS Compliance Testing Laboratory Ltd. All rights reserved.
This publication may be reproduced in whole or in part for non-commercial purposes as long as the Shenzhen LCS Compliance Testing Laboratory Ltd. is acknowledged as copyright owner and source of the material. Shenzhen LCS Compliance Testing Laboratory Ltd. takes no responsibility for and will not assume liability for damages resulting from the reader's interpretation of the reproduced material due to its placement and context.

Test Item Description.....	:	**01H**
Trade Mark.....	:	N/A
Test Model.....	:	CLUB DALI
Result.....	:	**Pass**

Compiled by:	**Supervised by:**	**Approved by:**
Emma Wang	Jelly Li	Gavin Liang
Emma Wang / File Administrator	Jelly Li / Technique principal	Gavin Liang / Manager

DRAFT

Shenzhen LCS Compliance Testing Laboratory Ltd.
Add: Room 101, 201, Building A and Room 301, Building C, Juji Industrial Park, Yabianxueziwei, Shajing Street, Bao'an District, Shenzhen, Guangdong, China
Tel: +(86) 0755-82591330 | E-mail: webmaster@lcs-cert.com | Web: www.lcs-cert.com
Scan code to check authenticity

TEST REPORT

Test Report No.: **LCSA07066144E**	September 08, 2026 Date of issue

Test Model	:	**CLUB DALI**
EUT	:	01H
Applicant	:	**CHROMATEQ SARL**
Address	:	191 Allee de Lauzaard – Bat.B, Rdc 1, 34980 Saint Gely du Fesc, France
Telephone	:	/
Fax	:	/
Manufacturer	:	**CHROMATEQ SARL**
Address	:	191 Allee de Lauzaard – Bat.B, Rdc 1, 34980 Saint Gely du Fesc, France
Telephone	:	/
Fax	:	/
Factory	:	**CHROMATEQ SARL**
Address	:	191 Allee de Lauzaard – Bat.B, Rdc 1, 34980 Saint Gely du Fesc, France
Telephone	:	/
Fax	:	/

Test Result	**Pass**

The test report merely corresponds to the test sample.
It is not permitted to copy extracts of these test result without the written permission of the test laboratory.

DRAFT

Shenzhen LCS Compliance Testing Laboratory Ltd.
Add: Room 101, 201, Building A and Room 301, Building C, Juji Industrial Park, Yabianxueziwei, Shajing Street, Bao'an District, Shenzhen, Guangdong, China
Tel: +(86) 0755-82591330 | E-mail: webmaster@lcs-cert.com | Web: www.lcs-cert.com
Scan code to check authenticity

Revision History

Report Version	Issue Date	Revision Content	Revised By
000	September 08, 2026	Initial Issue	/

DRAFT

Shenzhen LCS Compliance Testing Laboratory Ltd.
Add: Room 101, 201, Building A and Room 301, Building C, Juji Industrial Park, Yabianxueziwei, Shajing Street, Bao'an District, Shenzhen, Guangdong, China
Tel: +(86) 0755-82591330 | E-mail: webmaster@lcs-cert.com | Web: www.lcs-cert.com
Scan code to check authenticity

TABLE OF CONTENTS

Test Report Description Page

1. TEST STANDARDS 6
2. SUMMARY OF STANDARDS AND RESULTS 7
2.1 Description of Standards and Results 7
2.2 Description of Test Modes 8
2.3 Description of Performance Criteria 8
3. GENERAL INFORMATION 9
3.1 Description of Device (EUT) 9
3.2 Support equipment List 9
3.3 Description of Test Facility 9
3.4 Measurement Uncertainty 9
4. MEASURING DEVICES AND TEST EQUIPMENT 10
5. EMISSION TEST RESULTS (EMI) 12
5.1 Conducted disturbance at mains terminals 12
5.2 Radiated Emissions(30-1000MHz) 17
5.3 Voltage Fluctuations& Flicker Test 25
6. IMMUNITY TEST RESULTS (EMS) 29
6.1 Electrostatic Discharge Test 29
6.2 Continuous Radio Frequency Disturbances Test 32
6.3 Electrical Fast Transients(EFT) Test 35
6.4 Surge Test 38
6.5 Continuous Conducted Disturbances Test 41
6.6 Voltage Dips and Interruptions Test 44
7. TEST SETUP PHOTOS 46
8. EUT CONSTRUCTIONAL DETAILS (EUT PHOTOS) 52

DRAFT

Shenzhen LCS Compliance Testing Laboratory Ltd.
Add: Room 101, 201, Building A and Room 301, Building C, Juji Industrial Park, Yabianxueziwei, Shajing Street, Bao'an District, Shenzhen, Guangdong, China
Tel: +(86) 0755-82591330 | E-mail: webmaster@lcs-cert.com | Web: www.lcs-cert.com
Scan code to check authenticity

1. TEST STANDARDS

EN 55032:2015/A1:2020:Electromagnetic compatibility of multimedia equipment - Emission requirements

EN 55035:2017/A11:2020:Electromagnetic compatibility of multimedia equipment - Immunity requirements

EN IEC 61000-3-2:2019/A2:2024:Electromagnetic compatibility (EMC) - Part 3-2: Limits - Limits for harmonic current emissions (equipment input current ≤ 16 A per phase)

EN 61000-3-3:2013/A2:2021/AC:2022:Electromagnetic compatibility (EMC) - Part 3-3: Limits - Limitation of voltage changes, voltage fluctuations and flicker in public low-voltage supply systems, for equipment with rated current ≤16 A per phase and not subject to conditional connection

DRAFT

Shenzhen LCS Compliance Testing Laboratory Ltd.
Add: Room 101, 201, Building A and Room 301, Building C, Juji Industrial Park, Yabianxueziwei, Shajing Street, Bao'an District, Shenzhen, Guangdong, China
Tel: +(86) 0755-82591330 | E-mail: webmaster@lcs-cert.com | Web: www.lcs-cert.com
Scan code to check authenticity

2. SUMMARY OF STANDARDS AND RESULTS

2.1 Description of Standards and Results

EMISSION (EMI)			
Description of Test Item	**Standard**	**Result**	**Memo**
Conducted disturbance at mains terminals	EN 55032:2015/A1:2020	PASS	/
Radiated Emissions(30-1000MHz)	EN 55032:2015/A1:2020	PASS	/
Harmonic Current Emissions Test	EN IEC 61000-3-2:2019/A2:2024	N/A	For AC power port (≤16A), According to IEC 61000-3-2 Clause 7, this product belongs to exceptions of Clause 7 or Annex C. limits are not specified in this standard.
Voltage Fluctuations& Flicker Test	EN 61000-3-3:2013/A2:2021/AC:2022	PASS	/
IMMUNITY(EMS)			
Description of Test Item	**Standard**	**Result**	**Memo**
Electrostatic Discharge Test	EN 55035:2017/A11:2020	PASS	/
Continuous Radio Frequency Disturbances Test	EN 55035:2017/A11:2020	PASS	/
Electrical Fast Transients(EFT) Test	EN 55035:2017/A11:2020	PASS	/
Surge Test	EN 55035:2017/A11:2020	PASS	/
Continuous Conducted Disturbances Test	EN 55035:2017/A11:2020	PASS	/
Power-Frequency Magnetic Fields Test	EN 55035:2017/A11:2020	N/A	Applicable only to equipment containing devices intrinsically susceptible to magnetic fields
Voltage Dips and Interruptions Test	EN 55035:2017/A11:2020	PASS	/

DRAFT

Shenzhen LCS Compliance Testing Laboratory Ltd.
Add: Room 101, 201, Building A and Room 301, Building C, Juji Industrial Park, Yabianxueziwei, Shajing Street, Bao'an District, Shenzhen, Guangdong, China
Tel: +(86) 0755-82591330 | E-mail: webmaster@lcs-cert.com | Web: www.lcs-cert.com
Scan code to check authenticity

2.2 Description of Test Modes

No	Title	Description
Mode 1	SA mode(DC 9V)	/
Mode 2	Working(DC 5V)	/

2.3 Description of Performance Criteria

Performance Criteria

Performance criterion A

The equipment shall continue to operate as intended without operator intervention. No degradation of performance, loss of function or change of operating state is allowed below a performance level specified by the manufacturer when the equipment is used as intended. The performance level may be replaced by a permissible loss of performance. If the minimum performance level or the permissible performance loss is not specified by the manufacturer, then either of these may be derived from the product description and documentation, and by what the user may reasonably expect from the Equipment if used as intended.

Performance criterion B

During the application of the disturbance, degradation of performance is allowed. However, no unintended change of actual operating state or stored data is allowed to persist after the test.
After the test, the equipment shall continue to operate as intended without operator intervention; no degradation of performance or loss of function is allowed, below a performance level specified by the manufacturer, when the equipment is used as intended. The performance level may be replaced by a permissible loss of performance.
If the minimum performance level (or the permissible performance loss), or recovery time, is not specified by the manufacturer, then either of these may be derived from the product description and documentation, and by what the user may reasonably expect from the equipment if used as intended.

Performance criterion C

Loss of function is allowed, provided the function is self-recoverable, or can be restored by the operation Of the controls by the user in accordance with the manufacturer's instructions. A reboot or re-start operation is allowed.
Information stored in non-volatile memory, or protected by a battery backup, shall not be lost.

DRAFT

Shenzhen LCS Compliance Testing Laboratory Ltd.
Add: Room 101, 201, Building A and Room 301, Building C, Juji Industrial Park, Yabianxueziwei, Shajing Street, Bao'an District, Shenzhen, Guangdong, China
Tel: +(86) 0755-82591330 | E-mail: webmaster@lcs-cert.com | Web: www.lcs-cert.com
Scan code to check authenticity

3. GENERAL INFORMATION

3.1 Description of Device (EUT)

EUT : 01H
Test Model : CLUB DALI
Power Supply : DC 5V
Highest Internal Frequency : ≤108MHz
Classification of Equipment : Class B

3.2 Support equipment List

Equipment	Manufacturer	Model	Serial Number	Description
Adapter	/	/	/	/
PC	Lenovo	Lenovo E41-55	MP1ZW5C4	/

3.3 Description of Test Facility

The data and results referenced in this document are true and accurate. The reader is cautioned that there may be errors within the calibration limits of the equipment and facilities. The measurement uncertainty was calculated for all measurements listed in this test report acc. To CISPR 16 – 4 "Specification for radio disturbance and immunity measuring apparatus and methods – Part 4: Uncertainty in EMC Measurements" and is documented in the LCS quality system acc. To DIN EN ISO/IEC 17025. Furthermore, component and process variability of devices similar to that tested may result in additional deviation. The manufacturer has the sole responsibility of continued compliance of the device.

NVLAP Accreditation Code is 600167-0.
FCC Designation Number is CN5024.
CAB identifier is CN0071.
CNAS Registration Number is L4595.

3.4 Measurement Uncertainty

Test Item	Measurement Uncertainty
Conducted Emission (9kHz to 150kHz)	± 2.63 dB
Conducted Emission (150kHz to 30MHz)	± 2.35 dB
Power Disturbance (30MHz to 300MHz)	± 2.90dB
Radiated Emission (30MHz to 1000MHz)	± 3.48 dB
Radiated Emission (above 1000MHz)	± 3.90 dB
Voltage Fluctuations & Flicker	± 0.510%
Note: This uncertainty represents an expanded uncertainty expressed at approximately the 95% confidence level using a coverage factor of k=2.	

DRAFT

Shenzhen LCS Compliance Testing Laboratory Ltd.
Add: Room 101, 201, Building A and Room 301, Building C, Juji Industrial Park, Yabianxueziwei, Shajing Street, Bao'an District, Shenzhen, Guangdong, China
Tel: +(86) 0755-82591330 | E-mail: webmaster@lcs-cert.com | Web: www.lcs-cert.com
Scan code to check authenticity

4. MEASURING DEVICES AND TEST EQUIPMENT

Conducted disturbance at mains terminals				
Equipment	**Manufacturer**	**Model No**	**Serial No.**	**Due Date**
EMI Test Receiver	R&S	ESR3	102312	2026-12-21
Artificial Mains	R&S	ENV216	101288	2027-04-20
Pulse Limiter	R&S	ESH3-Z2	102750-NB	2027-05-05
EMI Test Software	Farad	EZ	/	/

Radiated Emissions(30-1000MHz)				
Equipment	**Manufacturer**	**Model No**	**Serial No.**	**Due Date**
EMI Test Software	Farad	EZ	/	/
By-log Antenna	SchwarZBECK	VULB9163	01565	2027-08-02
EMI Test Receiver	R&S	ESCI7	101173	2026-10-10
Broadband Preamplifier	/	BBV9745	00317	2026-11-06

Voltage Fluctuations& Flicker Test				
Equipment	**Manufacturer**	**Model No**	**Serial No.**	**Due Date**
HARMONICS&FLICKER MEASUREMENT SYSTEM	EVERFINE	HFM-3000	P630850CD1411116	2026-12-21
HARMONICS&FLICKER TESTING POWER SOURCE	EVERFINE	HFM-4000	P624486CD1411124	2026-12-21

Electrostatic Discharge Test				
Equipment	**Manufacturer**	**Model No**	**Serial No.**	**Due Date**
ESD Simulator	emtest	ESD NX30.1	111969	2027-05-18

Continuous Radio Frequency Disturbances Test				
Equipment	**Manufacturer**	**Model No**	**Serial No.**	**Due Date**
Vector signal generator	Agilent	N5181A	MY50143169	2026-09-26
RF POWER AMPLIFIER	OPHIR	5225R	1052	2027-05-05
RF POWER AMPLIFIER	YEAH TECH	YEAH TECH	25090001	2026-09-26
Stacked Broadband Log Periodic Antenna	SCHWARZBECK	STLP 9128	9128ES-145	2027-07-13
Stacked Mikrowellen Log.-Per Antenna	SCHWARZBECK	STLP 9149	9149-482	2027-07-19
RS Electric field probe	narda	EP 601	611WX80208	2027-05-05

DRAFT

Shenzhen LCS Compliance Testing Laboratory Ltd.
Add: Room 101, 201, Building A and Room 301, Building C, Juji Industrial Park, Yabianxueziwei, Shajing Street, Bao'an District, Shenzhen, Guangdong, China
Tel: +(86) 0755-82591330 | E-mail: webmaster@lcs-cert.com | Web: www.lcs-cert.com
Scan code to check authenticity

Power Sensor	Agilent	E9301H	MY41495234	2026-09-26
Power Sensor	Agilent	E9301H	MY41495616	2026-09-26
Power Meter	Agilent	E4419B	MY45104493	2026-09-26

Electrical Fast Transients(EFT) Test				
Equipment	**Manufacturer**	**Model No**	**Serial No.**	**Due Date**
Immunity Simulative Generator	EM TEST	UCS500-M4	0101-34	2027-05-05

Surge Test				
Equipment	**Manufacturer**	**Model No**	**Serial No.**	**Due Date**
Immunity Simulative Generator	EM TEST	UCS500-M4	0101-34	2027-05-05

Continuous Conducted Disturbances Test				
Equipment	**Manufacturer**	**Model No**	**Serial No.**	**Due Date**
Simulator	Frankonia	CIT-10/75	A126A1195	2027-05-05
CDN	Frankonia	CDN-M2+M3	A2210177	2027-05-05
6dB Attenuator	/	DAM25W	1172040	2027-05-05

Voltage Dips and Interruptions Test				
Equipment	**Manufacturer**	**Model No**	**Serial No.**	**Due Date**
Three phase power supply fault simulator	HTEC	HPFS 2003P	234711	2027-01-05
Programmable AC fault power supply	HTEC	HV3P200T	234710	2027-01-05

DRAFT

Shenzhen LCS Compliance Testing Laboratory Ltd.
Add: Room 101, 201, Building A and Room 301, Building C, Juji Industrial Park, Yabianxueziwei, Shajing Street, Bao'an District, Shenzhen, Guangdong, China
Tel: +(86) 0755-82591330 | E-mail: webmaster@lcs-cert.com | Web: www.lcs-cert.com
Scan code to check authenticity

5. EMISSION TEST RESULTS (EMI)

5.1 Conducted disturbance at mains terminals

5.1.1 Limits

Class A:		
Frequency	Quasi-Peak Level dB(μV)	Average Level dB(μV)
150 kHz~500 kHz	79	66
500 kHz~30 MHz	73	60
Class B:		
Frequency	Quasi-Peak Level dB(μV)	Average Level dB(μV)
150 kHz~500 kHz	66 ~ 56*	56 ~ 46*
500 kHz~5 MHz	56	46
5 MHz~30 MHz	60	50
Notes:1. * Decreasing linearly with logarithm of frequency. 2. The lower limit shall apply at the transition frequencies.		

5.1.2 Test procedure

(1) The EUT placement requires reference to the test block diagram and is placed on a non-metallic table.

(2)Setup the EUT and assistant equipment as shown above block diagram and equipment list.

(3)The EUT's power adapter was connected to the power mains through a line impedance stabilization network (L.I.S.N). which this provided a 50-ohm coupling impedance for the EUT (Please refer to the block diagram of the test setup and photographs). Both sides of power line were checked for maximum conducted disturbance. In order to find the maximum emission, the relative positions of equipment and all of the interface cables were changed according to EN 55032 on conducted disturbance emission test.

(4)The bandwidth of test receiver is set at 9 kHz.

(5)The frequency range from 150 kHz to 30 MHz is checked.

(6) Note: 1) Pre-scan all modes and recorded the worst case results in this report.

2) Margin= Reading level + Correct factor–Limit

Correct Factor=Lisn Factor+Cable Factor+Insertion loss of Pulse Limiter

DRAFT

Shenzhen LCS Compliance Testing Laboratory Ltd.
Add: Room 101, 201, Building A and Room 301, Building C, Juji Industrial Park, Yabianxueziwei, Shajing Street, Bao'an District, Shenzhen, Guangdong, China
Tel: +(86) 0755-82591330 | E-mail: webmaster@lcs-cert.com | Web: www.lcs-cert.com
Scan code to check authenticity

5.1.3 Test Setup Diagram

For table-top equipment

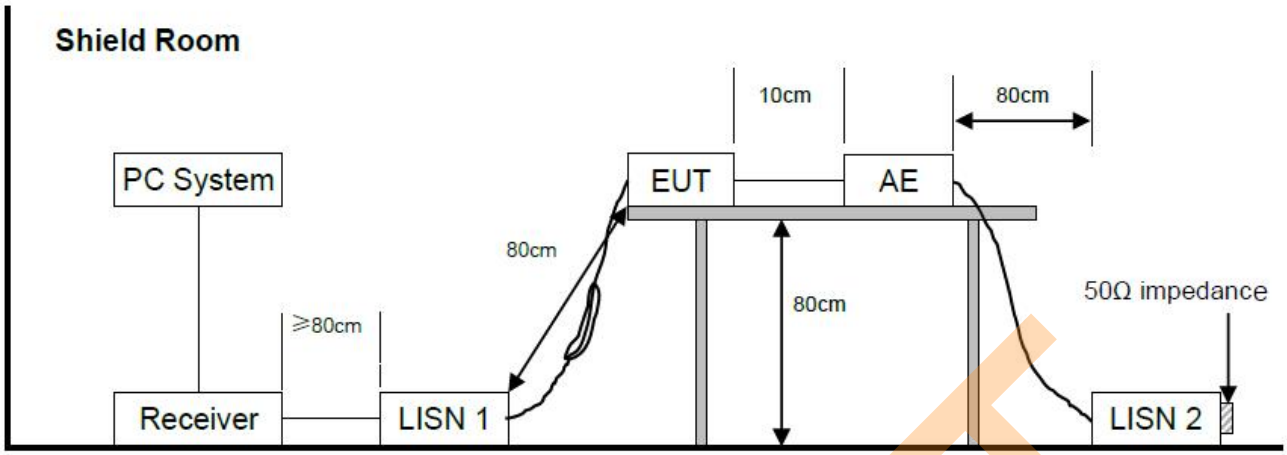

For floor standing equipment

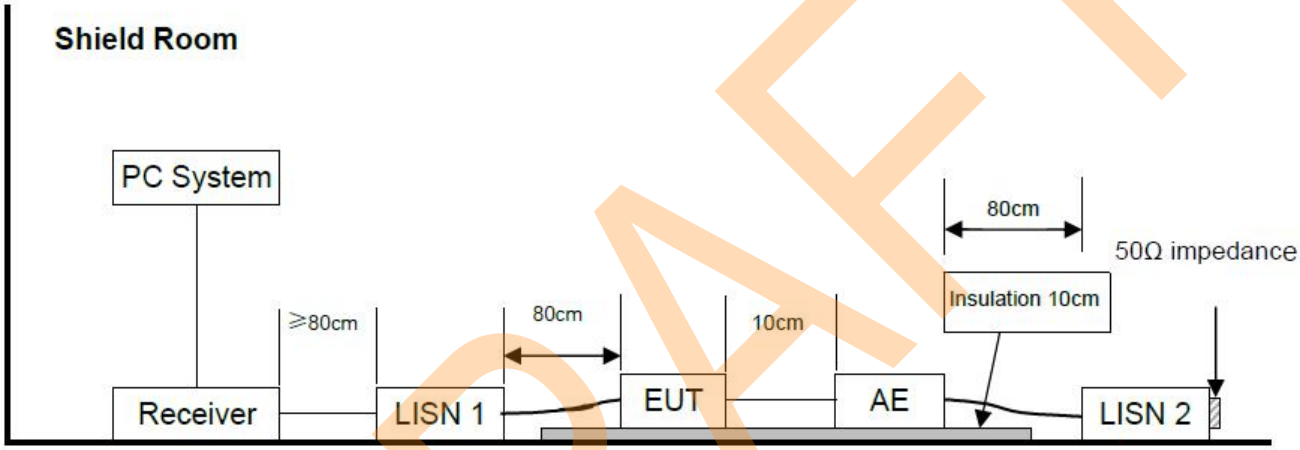

For combinations equipment

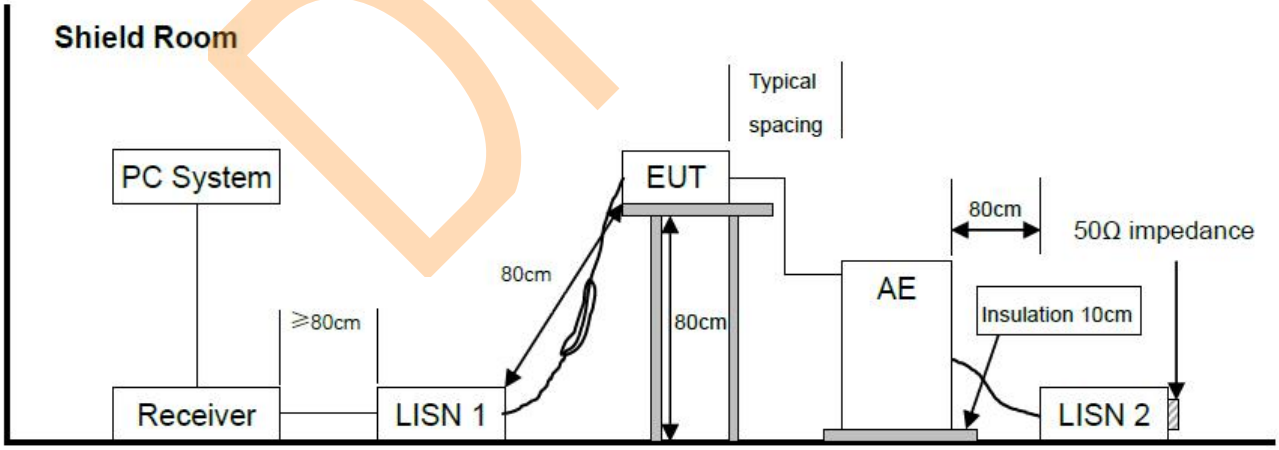

Shenzhen LCS Compliance Testing Laboratory Ltd.
Add: Room 101, 201, Building A and Room 301, Building C, Juji Industrial Park, Yabianxueziwei, Shajing Street, Bao'an District, Shenzhen, Guangdong, China
Tel: +(86) 0755-82591330 | E-mail: webmaster@lcs-cert.com | Web: www.lcs-cert.com
Scan code to check authenticity

DRAFT

5.1.4 E.U.T. Operation

Operating Environment:			
Temperature:	22.5° C	Humidity:	60.0%RH
Test Engineer	Xing Jin Mo		
Mode 1	SA mode	Voltage	DC 9V

DRAFT

Shenzhen LCS Compliance Testing Laboratory Ltd.
Add: Room 101, 201, Building A and Room 301, Building C, Juji Industrial Park, Yabianxueziwei, Shajing Street, Bao'an District, Shenzhen, Guangdong, China
Tel: +(86) 0755-82591330 | E-mail: webmaster@lcs-cert.com | Web: www.lcs-cert.com
Scan code to check authenticity

5.1.5 Test data

Mode 1 / Line: Line

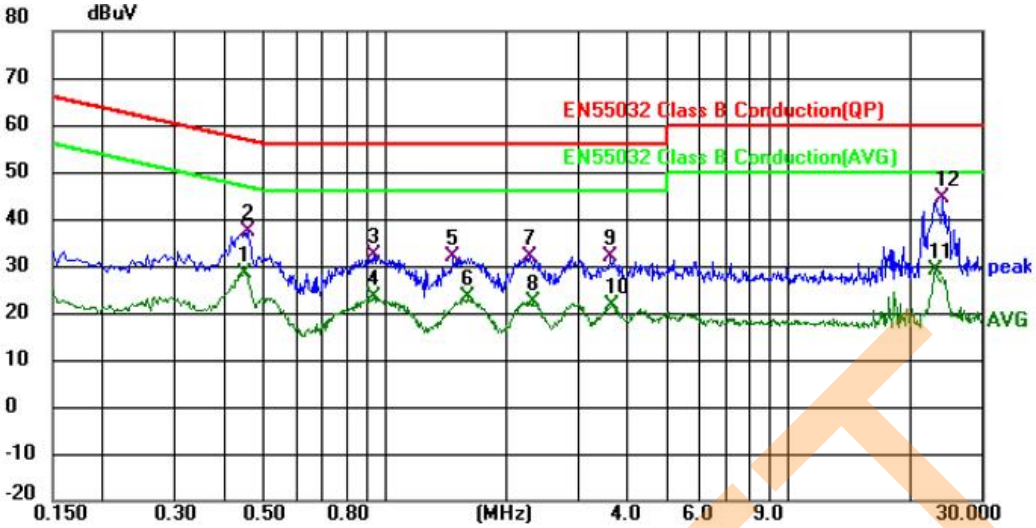

No.	Mk.	Freq.	Reading Level	Correct Factor	Measure-ment	Limit	Margin		
		MHz	dBuV	dB	dBuV	dBuV	dB	Detector	Comment
1		0.4470	8.26	20.18	28.44	46.93	-18.49	AVG	
2		0.4560	17.13	20.16	37.29	56.77	-19.48	QP	
3		0.9420	11.96	20.48	32.44	56.00	-23.56	QP	
4		0.9420	3.00	20.48	23.48	46.00	-22.52	AVG	
5		1.4730	11.61	20.46	32.07	56.00	-23.93	QP	
6		1.5945	2.90	20.47	23.37	46.00	-22.63	AVG	
7		2.2785	11.43	20.46	31.89	56.00	-24.11	QP	
8		2.3280	1.81	20.46	22.27	46.00	-23.73	AVG	
9		3.6240	11.37	20.52	31.89	56.00	-24.11	QP	
10		3.6420	1.18	20.52	21.70	46.00	-24.30	AVG	
11		23.1270	8.19	20.88	29.07	50.00	-20.93	AVG	
12	*	24.1350	23.77	20.86	44.63	60.00	-15.37	QP	

DRAFT

Shenzhen LCS Compliance Testing Laboratory Ltd.
Add: Room 101, 201, Building A and Room 301, Building C, Juji Industrial Park, Yabianxueziwei, Shajing Street, Bao'an District, Shenzhen, Guangdong, China
Tel: +(86) 0755-82591330 | E-mail: webmaster@lcs-cert.com | Web: www.lcs-cert.com
Scan code to check authenticity

Mode 1 / Line: Neutral

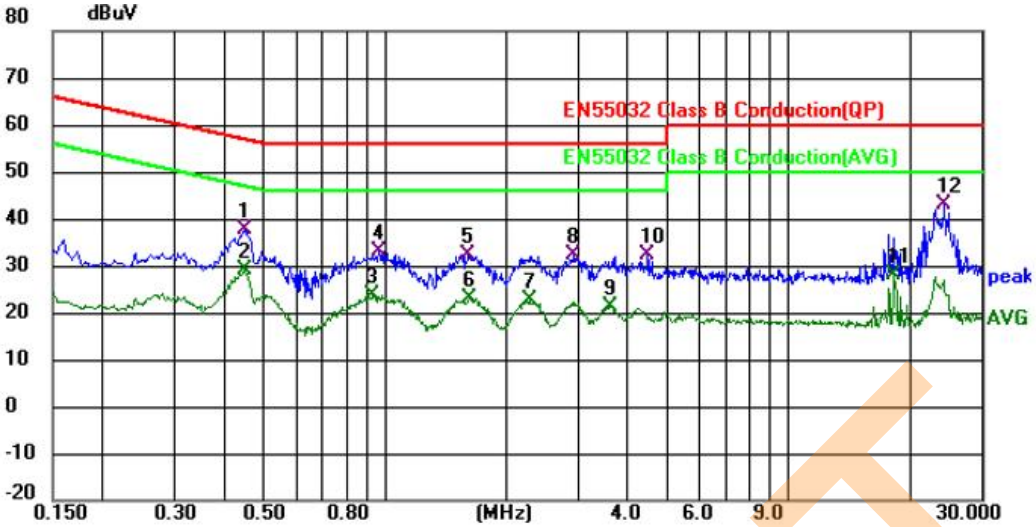

No.	Mk.	Freq.	Reading Level	Correct Factor	Measure-ment	Limit	Margin		
		MHz	dBuV	dB	dBuV	dBuV	dB	Detector	Comment
1		0.4470	17.59	20.18	37.77	56.93	-19.16	QP	
2		0.4470	8.88	20.18	29.06	46.93	-17.87	AVG	
3		0.9285	3.46	20.45	23.91	46.00	-22.09	AVG	
4		0.9645	12.67	20.46	33.13	56.00	-22.87	QP	
5		1.6035	11.83	20.51	32.34	56.00	-23.66	QP	
6		1.6260	2.59	20.51	23.10	46.00	-22.90	AVG	
7		2.2965	2.01	20.53	22.54	46.00	-23.46	AVG	
8		2.9400	11.95	20.53	32.48	56.00	-23.52	QP	
9		3.6150	0.75	20.53	21.28	46.00	-24.72	AVG	
10		4.4655	11.76	20.53	32.29	56.00	-23.71	QP	
11		18.2445	7.15	20.90	28.05	50.00	-21.95	AVG	
12	*	24.3510	22.34	20.78	43.12	60.00	-16.88	QP	

DRAFT

Shenzhen LCS Compliance Testing Laboratory Ltd.
Add: Room 101, 201, Building A and Room 301, Building C, Juji Industrial Park, Yabianxueziwei, Shajing Street, Bao'an District, Shenzhen, Guangdong, China
Tel: +(86) 0755-82591330 | E-mail: webmaster@lcs-cert.com | Web: www.lcs-cert.com
Scan code to check authenticity

5.2 Radiated Emissions(30-1000MHz)

5.2.1 Limits

Class A		
Equipment	Frequency	Field Strengths Limits at 3m measuring distance dB(μV)/m
Class A Equipment	30 MHz to 230 MHz	50
	230 MHz to 1 GHz	57
Class B		
Equipment	Frequency	Field Strengths Limits at 3m measuring distance dB(μV)/m
Class B Equipment	30 MHz to 230 MHz	40
	230 MHz to 1 GHz	47
Note: (1) The smaller limit shall apply at the cross point between two frequency bands. (2) Distance is the distance in meters between the measuring instrument, antenna and the closest point of any part of the device or system.		

5.2.2 Test procedure

(1) The EUT was placed on a non-metallic table (Refer to the 'Block diagram of test setup'). above the ground plane inside an anechoic chamber.

(2) Test antenna center was located 3m or 10m from the EUT and assistant equipment boundary (imaginary circular periphery) on an adjustable mast. A pre-scan was first performed in order to find prominent radiated emissions. For final emissions measurements at each frequency of interest, the EUT were rotated and the antenna height was varied between 1m and 4m in order to maximize the emission. Measurements in both horizontal and vertical polarities were made and the data was recorded. In order to find the maximum emission, the relative positions of equipment and all of the interface cables were changed according to EN 55032 on radiated emission test.

(3) Spectrum frequency from 30 MHz to 1 GHz was investigated.

(4) For emissions from 30 MHz to 1 GHz, Quasi-Peak values were measured with EMI Receiver and the bandwidth of Receiver is 120 kHz.

(5) Note:1).Pre-Scan all modes, the record worst case mode result in this report.

2) Margin= Reading level + Correct factor – Limit

Correct Factor=Antenna Factor+Cable Factor- Pre-amplifier Factor.

Shenzhen LCS Compliance Testing Laboratory Ltd.
Add: Room 101, 201, Building A and Room 301, Building C, Juji Industrial Park, Yabianxueziwei, Shajing Street, Bao'an District, Shenzhen, Guangdong, China
Tel: +(86) 0755-82591330 | E-mail: webmaster@lcs-cert.com | Web: www.lcs-cert.com
Scan code to check authenticity

DRAFT

5.2.3 Test Setup Diagram

Below 1 GHz

For table-top equipment

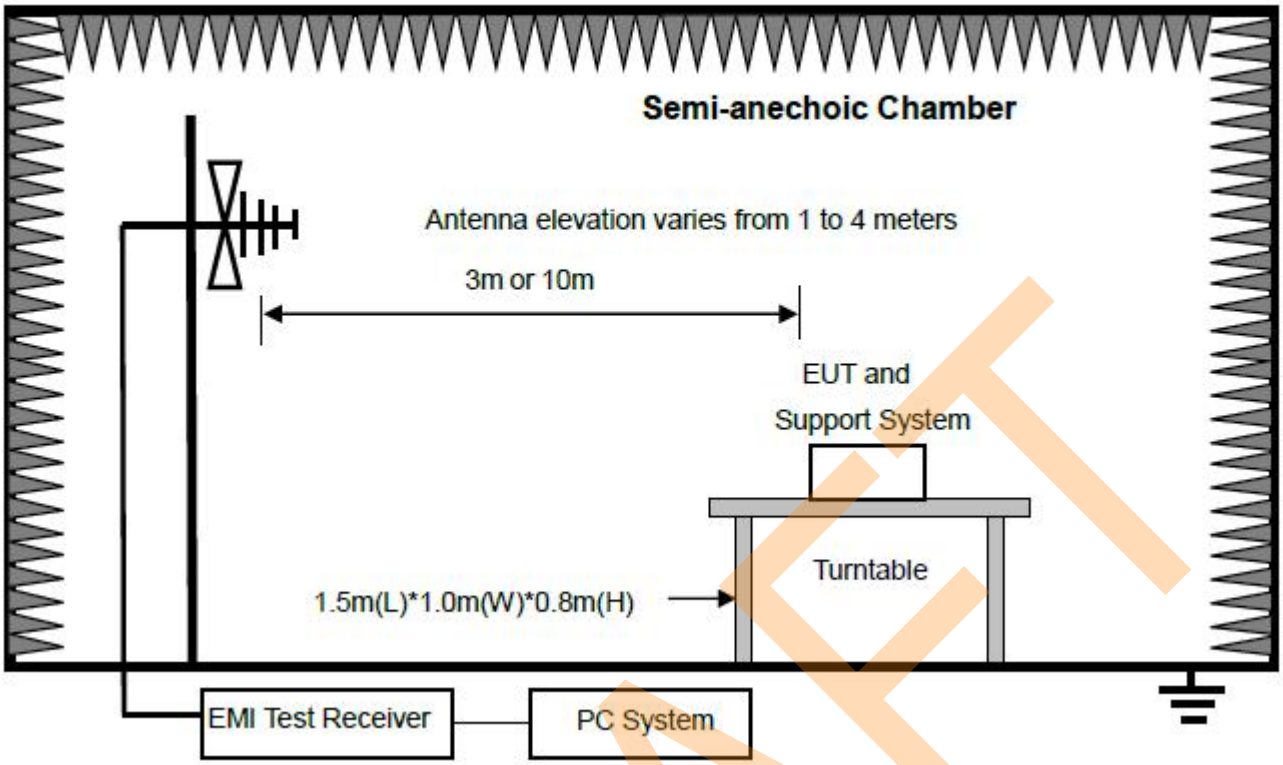

DRAFT

Shenzhen LCS Compliance Testing Laboratory Ltd.
Add: Room 101, 201, Building A and Room 301, Building C, Juji Industrial Park, Yabianxueziwei, Shajing Street, Bao'an District, Shenzhen, Guangdong, China
Tel: +(86) 0755-82591330 | E-mail: webmaster@lcs-cert.com | Web: www.lcs-cert.com
Scan code to check authenticity

For floor standing equipment

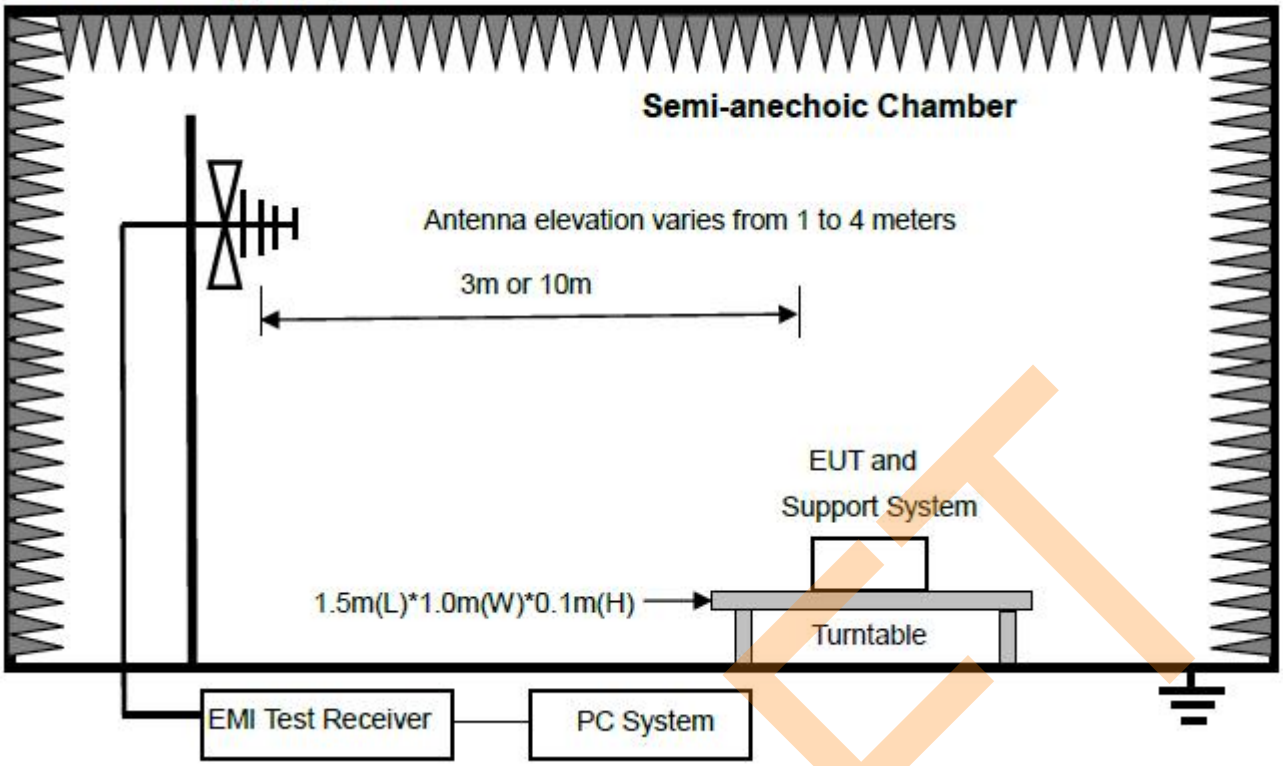

DRAFT

Shenzhen LCS Compliance Testing Laboratory Ltd.
Add: Room 101, 201, Building A and Room 301, Building C, Juji Industrial Park, Yabianxueziwei, Shajing Street, Bao'an District, Shenzhen, Guangdong, China
Tel: +(86) 0755-82591330 | E-mail: webmaster@lcs-cert.com | Web: www.lcs-cert.com
Scan code to check authenticity

5.2.4 E.U.T. Operation

Operating Environment:			
Temperature:	26.0° C	Humidity:	54.0%RH
Test Engineer	Xing Jin Mo		
Mode 1	SA mode	Voltage	DC 9V
Mode 2	Working	Voltage	DC 5V

DRAFT

Shenzhen LCS Compliance Testing Laboratory Ltd.
Add: Room 101, 201, Building A and Room 301, Building C, Juji Industrial Park, Yabianxueziwei, Shajing Street, Bao'an District, Shenzhen, Guangdong, China
Tel: +(86) 0755-82591330 | E-mail: webmaster@lcs-cert.com | Web: www.lcs-cert.com
Scan code to check authenticity

5.2.5 Test data

Mode 1 / Polarization: Vertical

No.	Frequency (MHz)	Reading (dBuV)	Factor (dB/m)	Level (dBuV/m)	Limit (dBuV/m)	Margin (dB)	Detector	P/F	Remark
1	31.7313	48.01	-20.68	27.33	40.00	-12.67	QP	P	
2	47.9940	49.20	-18.35	30.85	40.00	-9.15	QP	P	
3 *	76.2442	53.58	-22.58	31.00	40.00	-9.00	QP	P	
4	117.7725	45.60	-20.42	25.18	40.00	-14.82	QP	P	
5	211.5265	38.97	-19.80	19.17	40.00	-20.83	QP	P	
6	716.6820	44.20	-9.54	34.66	47.00	-12.34	QP	P	

DRAFT

Shenzhen LCS Compliance Testing Laboratory Ltd.
Add: Room 101, 201, Building A and Room 301, Building C, Juji Industrial Park, Yabianxueziwei, Shajing Street, Bao'an District, Shenzhen, Guangdong, China
Tel: +(86) 0755-82591330 | E-mail: webmaster@lcs-cert.com | Web: www.lcs-cert.com
Scan code to check authenticity

Mode 1 / Polarization: Horizontal

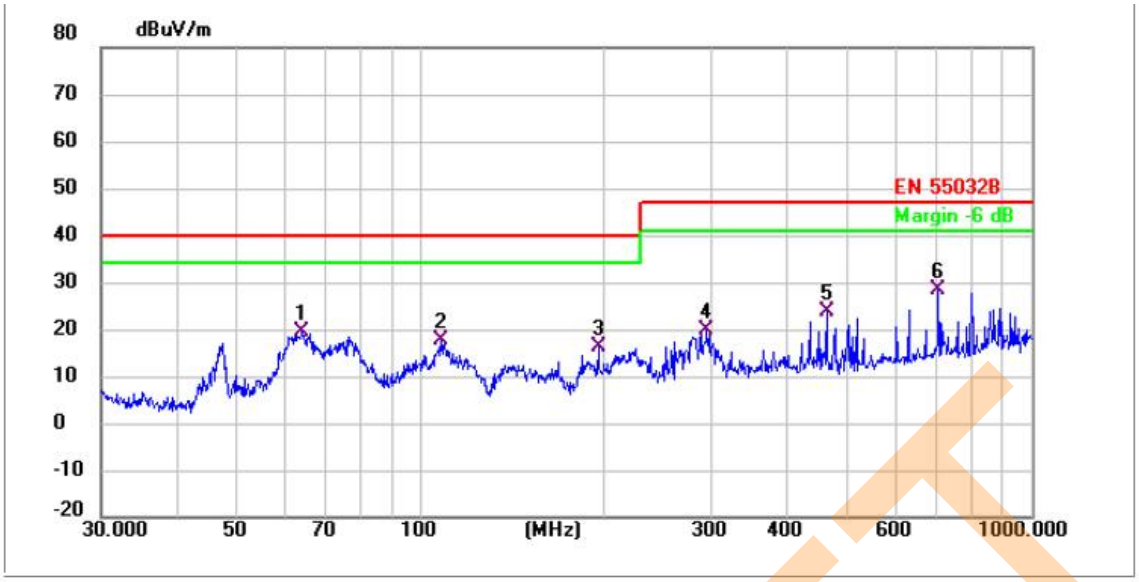

No.	Frequency (MHz)	Reading (dBuV)	Factor (dB/m)	Level (dBuV/m)	Limit (dBuV/m)	Margin (dB)	Detector	P/F	Remark
1	63.9828	40.56	-21.11	19.45	40.00	-20.55	QP	P	
2	107.8877	36.37	-18.85	17.52	40.00	-22.48	QP	P	
3	195.8220	37.16	-20.78	16.38	40.00	-23.62	QP	P	
4	294.1137	37.08	-17.37	19.71	47.00	-27.29	QP	P	
5	462.3455	37.77	-13.91	23.86	47.00	-23.14	QP	P	
6 *	704.2261	38.09	-9.75	28.34	47.00	-18.66	QP	P	

DRAFT

Shenzhen LCS Compliance Testing Laboratory Ltd.
Add: Room 101, 201, Building A and Room 301, Building C, Juji Industrial Park, Yabianxueziwei, Shajing Street, Bao'an District, Shenzhen, Guangdong, China
Tel: +(86) 0755-82591330 | E-mail: webmaster@lcs-cert.com | Web: www.lcs-cert.com
Scan code to check authenticity

Mode 2 / Polarization: Vertical

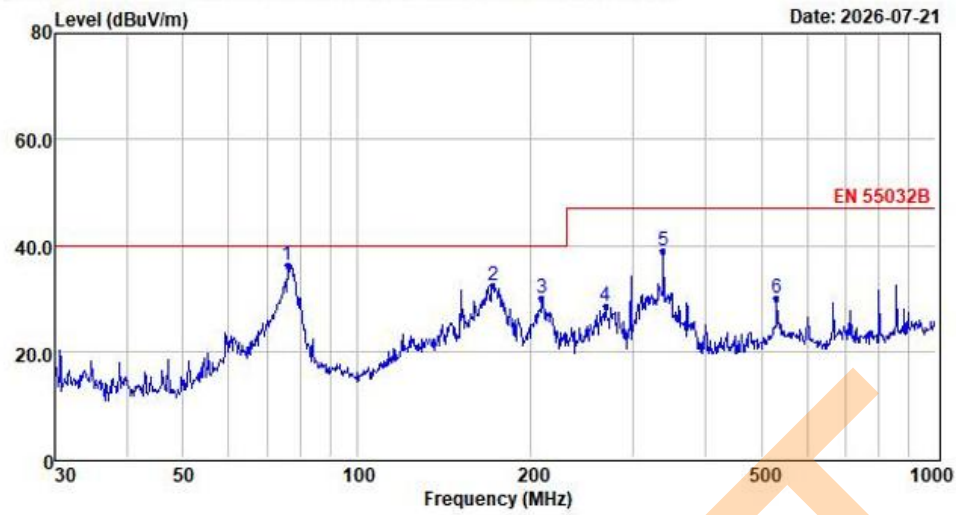

	Freq MHz	Reading dBuV	CabLos dB	Antfac dB/m	Measured dBuV/m	Limit dBuV/m	Over dB	Remark
1	75.71	25.61	0.72	9.97	36.30	40.00	-3.70	QP
2	171.99	21.48	1.11	9.72	32.31	40.00	-7.69	QP
3	208.58	17.55	1.21	11.19	29.95	40.00	-10.05	QP
4	269.43	14.33	1.29	13.03	28.65	47.00	-18.35	QP
5	338.40	23.36	1.35	14.26	38.97	47.00	-8.03	QP
6	531.96	11.12	1.50	17.39	30.01	47.00	-16.99	QP

Note: 1. All readings are Quasi-peak values.
2. Measured= Reading + Antenna Factor + Cable Loss
3. The emission that are 20db below the official limit are not reported

DRAFT

Shenzhen LCS Compliance Testing Laboratory Ltd.
Add: Room 101, 201, Building A and Room 301, Building C, Juji Industrial Park, Yabianxueziwei, Shajing Street, Bao'an District, Shenzhen, Guangdong, China
Tel: +(86) 0755-82591330 | E-mail: webmaster@lcs-cert.com | Web: www.lcs-cert.com
Scan code to check authenticity

Mode 2 / Polarization: Horizontal

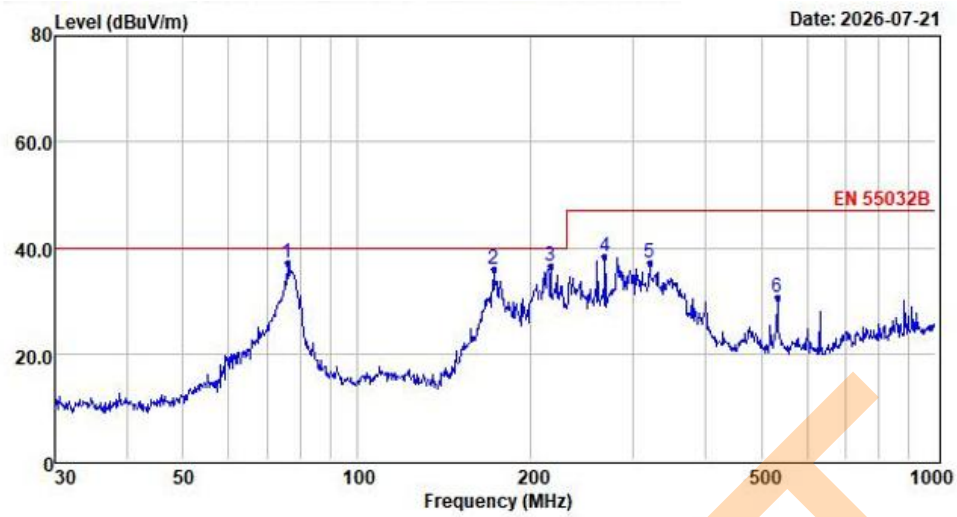

	Freq	Reading	CabLos	Antfac	Measured	Limit	Over	Remark
	MHz	dBuV	dB	dB/m	dBuV/m	dBuV/m	dB	
1	75.71	26.41	0.72	9.97	37.10	40.00	-2.90	QP
2	172.60	25.14	1.11	9.73	35.98	40.00	-4.02	QP
3	216.02	23.80	1.22	11.52	36.54	40.00	-3.46	QP
4	268.49	24.02	1.28	13.00	38.30	47.00	-8.70	QP
5	321.06	22.23	1.34	13.53	37.10	47.00	-9.90	QP
6	533.83	11.78	1.50	17.42	30.70	47.00	-16.30	QP

Note: 1. All readings are Quasi-peak values.
2. Measured= Reading + Antenna Factor + Cable Loss
3. The emission that are 20db below the official limit are not reported

DRAFT

Shenzhen LCS Compliance Testing Laboratory Ltd.
Add: Room 101, 201, Building A and Room 301, Building C, Juji Industrial Park, Yabianxueziwei, Shajing Street, Bao'an District, Shenzhen, Guangdong, China
Tel: +(86) 0755-82591330 | E-mail: webmaster@lcs-cert.com | Web: www.lcs-cert.com
Scan code to check authenticity

5.3 Voltage Fluctuations& Flicker Test

5.3.1 Limits

Voltage fluctuations & flicker Limit

Test Item	Limit	Note
Pst	1.0	Pst means Short-term flicker indicator
Plt	0.65	Plt means long-term flicker indicator
Tdt	0.5	Tdt means maximum time that dt exceeds 3.3%
dmax (%)	4%	dmax means maximum relative voltage change.
dc (%)	3.3%	dc means relative steady-state voltage change.

5.3.2 Test procedure

The EUT is placed on top of a wooden table (according to the standard height requirements, refer to the test layout), the most unfavorable sequence of voltage changes under normal conditions during the flick measurement; the measure time shall include that part of whole operation changes. The observation period for short-term flicker indicator is 10 minutes and the observation period for long-term flicker indicator is 2 hours.

DRAFT

Shenzhen LCS Compliance Testing Laboratory Ltd.
Add: Room 101, 201, Building A and Room 301, Building C, Juji Industrial Park, Yabianxueziwei, Shajing Street, Bao'an District, Shenzhen, Guangdong, China
Tel: +(86) 0755-82591330 | E-mail: webmaster@lcs-cert.com | Web: www.lcs-cert.com
Scan code to check authenticity

5.3.3 Test Setup Diagram

Table-top device

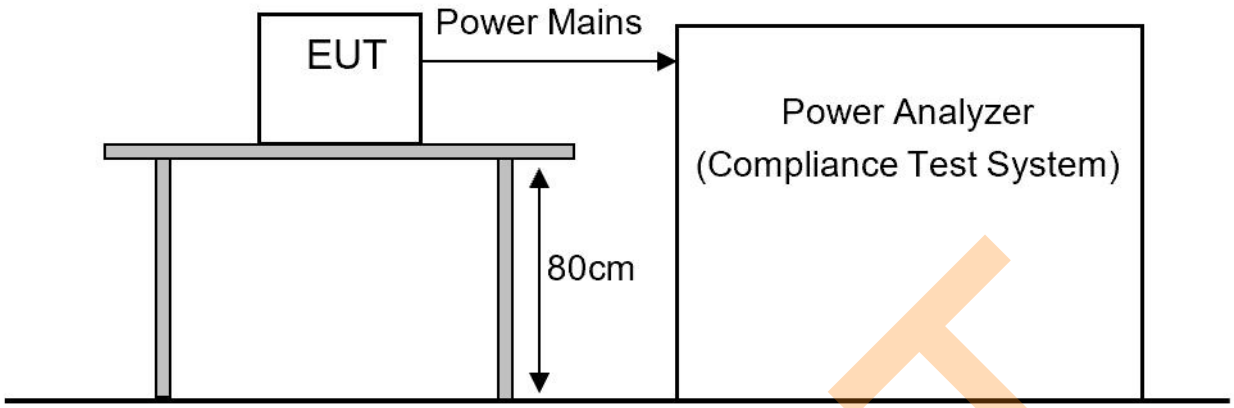

Floor-standing device

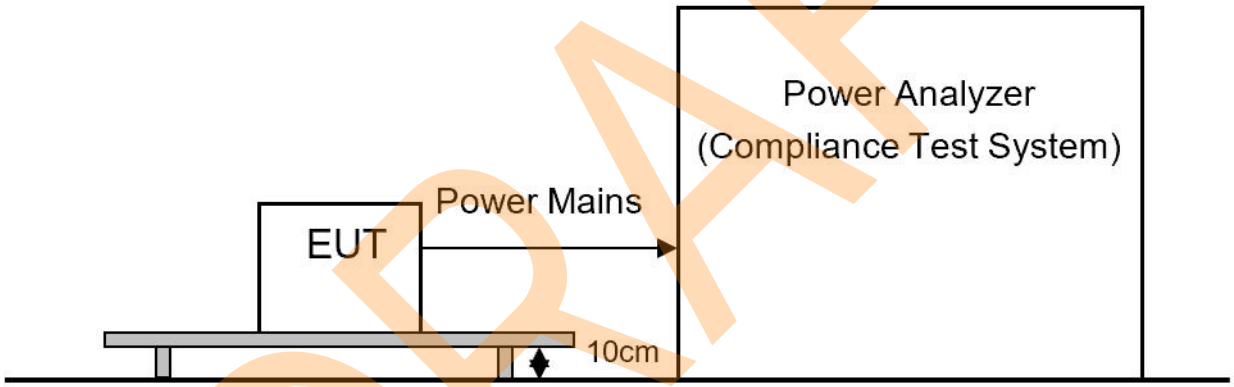

DRAFT

Shenzhen LCS Compliance Testing Laboratory Ltd.
Add: Room 101, 201, Building A and Room 301, Building C, Juji Industrial Park, Yabianxueziwei, Shajing Street, Bao'an District, Shenzhen, Guangdong, China
Tel: +(86) 0755-82591330 | E-mail: webmaster@lcs-cert.com | Web: www.lcs-cert.com
Scan code to check authenticity

5.3.4 E.U.T. Operation

Operating Environment:			
Temperature:	24.3° C	Humidity:	55.8%RH
Test Engineer	Xing Jin Mo		
Mode 1	SA mode	Voltage	DC 9V

DRAFT

Shenzhen LCS Compliance Testing Laboratory Ltd.
Add: Room 101, 201, Building A and Room 301, Building C, Juji Industrial Park, Yabianxueziwei, Shajing Street, Bao'an District, Shenzhen, Guangdong, China
Tel: +(86) 0755-82591330 | E-mail: webmaster@lcs-cert.com | Web: www.lcs-cert.com
Scan code to check authenticity

5.3.5 Test data

Mode 1

Pst and Limit

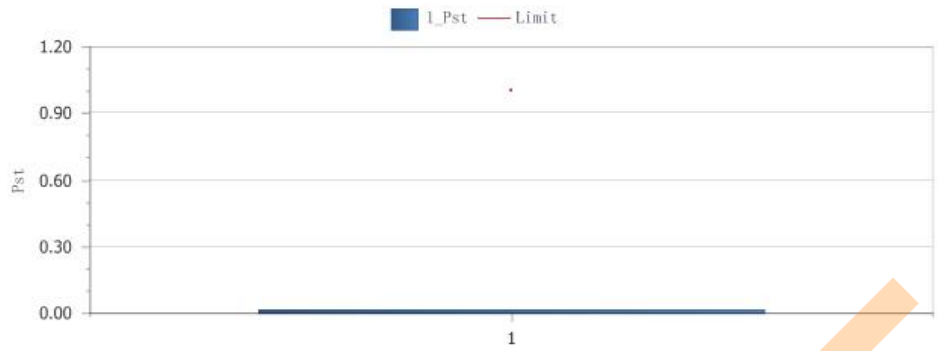

Plt and Limit

Relevant Parameter and Judgment During Test Period

Voltage at end of test	230.093V		
Voltage Fluctuation and Flicker	Test Value	Test Limit	Result
Tmax	0ms	500ms	Pass
dc	0.00%	3.30%	Pass
dmax	0.00%	4.00%	Pass
Pst	0.018	1.000	Pass
Plt	0.008	0.650	Pass

Eleml Test Parameters

Count	dc(%)	dmax(%)	Tmax(ms)	Pst	Plt
1	0.00	0.00	0.00	0.018	0.008

DRAFT

Shenzhen LCS Compliance Testing Laboratory Ltd.
Add: Room 101, 201, Building A and Room 301, Building C, Juji Industrial Park, Yabianxueziwei, Shajing Street, Bao'an District, Shenzhen, Guangdong, China
Tel: +(86) 0755-82591330 | E-mail: webmaster@lcs-cert.com | Web: www.lcs-cert.com
Scan code to check authenticity

6. IMMUNITY TEST RESULTS (EMS)

6.1 Electrostatic Discharge Test

6.1.1 Limits

Test Level		Performance Criteria
Air Discharge	±2kV, ±4kV and ±8kV	B
Contact Discharge	±4kV	
Performance criteria B description: During the test, degradation of performance is allowed. However, no change of operating state or stored data is allowed to persist after the test. After the test, the EUT shall continue to operate as intended without operator intervention. No degradation of performance or loss of function is allowed, after the application of the phenomena below a performance level specified by the manufacturer, when the EUT is used as intended.		

6.1.2 Test procedure

Air Discharge:

The test was applied on non-conductive surfaces of EUT. The round discharge tip of the discharge electrode was approached as fast as possible to touch the EUT. After each discharge, the discharge electrode was removed from the EUT. The generator was re-triggered for a new single discharge and repeated 20 times for each pre-selected test point. This procedure was repeated until all the air discharge completed.

Contact Discharge:

All the procedure was same as air discharge. Except that the generator was re-triggered for a new single discharge. The tip of the discharge electrode was touching the EUT before the discharge switch was operated.

Indirect discharge for horizontal coupling plane:

At least 20 single discharges were applied to the horizontal coupling plane, at points on each side of the EUT. The discharge electrode positions vertically at a distance of 0.1m from the EUT and with the discharge electrode touching the coupling plane.

Indirect discharge for vertical coupling plane:

At least 20 single discharges were applied to the center of one vertical edge of the coupling plane. The coupling plane, of dimensions 0.5m X 0.5m, was placed parallel to, and positioned at a distance of 0.1m from the EUT. Discharges were applied to the coupling plane, with this plane in sufficient different positions that the four faces of the EUT are completely illuminated.

DRAFT

Shenzhen LCS Compliance Testing Laboratory Ltd.
Add: Room 101, 201, Building A and Room 301, Building C, Juji Industrial Park, Yabianxueziwei, Shajing Street, Bao'an District, Shenzhen, Guangdong, China
Tel: +(86) 0755-82591330 | E-mail: webmaster@lcs-cert.com | Web: www.lcs-cert.com
Scan code to check authenticity

6.1.3 Test Setup Diagram

Table-top equipment

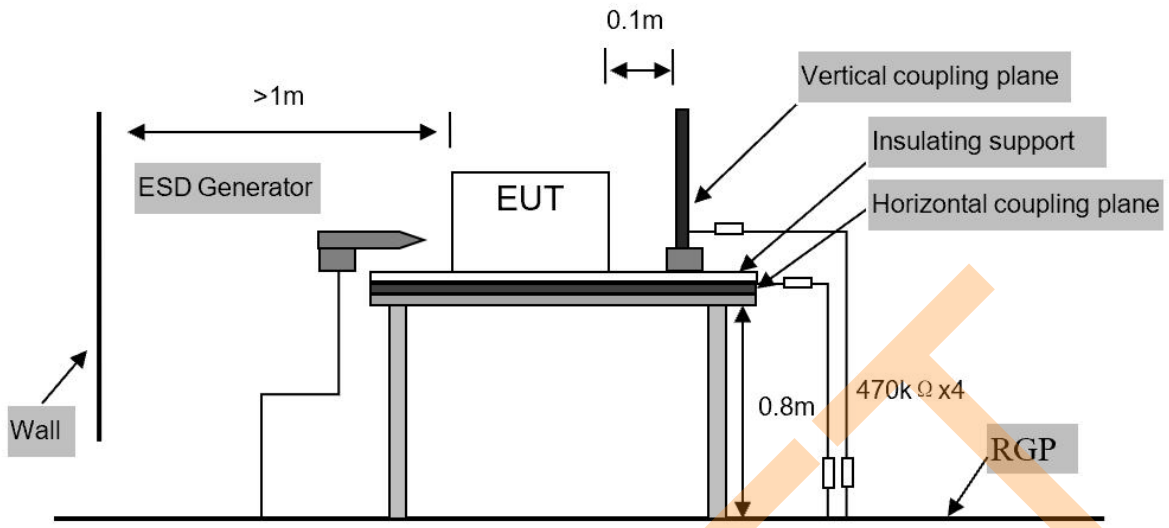

Floor-standing equipment

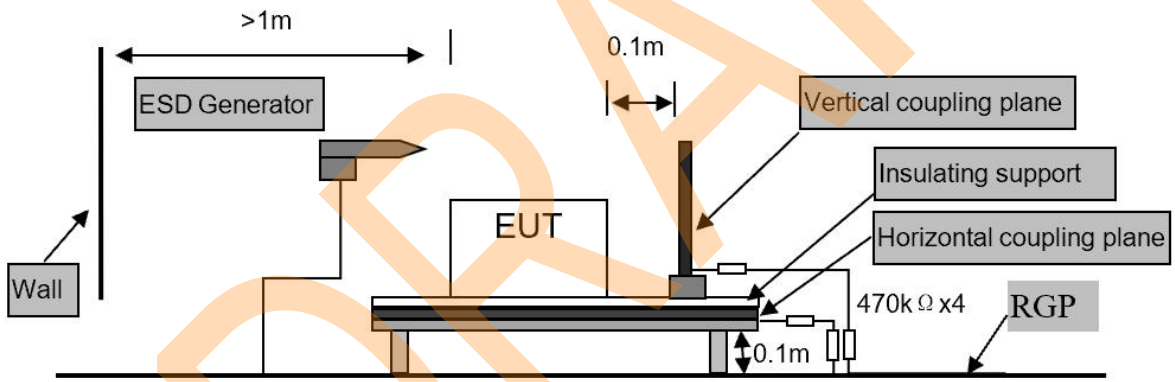

DRAFT

Shenzhen LCS Compliance Testing Laboratory Ltd.
Add: Room 101, 201, Building A and Room 301, Building C, Juji Industrial Park, Yabianxueziwei, Shajing Street, Bao'an District, Shenzhen, Guangdong, China
Tel: +(86) 0755-82591330 | E-mail: webmaster@lcs-cert.com | Web: www.lcs-cert.com
Scan code to check authenticity

6.1.4 Test data

Operating Environment:			
Test Site:	ELECTROSTATIC DISCHARG IMMUNITY TEST （0KV-30KV）	Test Engineer	Xing Jin Mo
Temperature:	23.9° C	Humidity:	53.5%RH
Memo:	/		

Sample No.: A260701066003	Mode 1: SA mode
Test voltage: DC 9V	Memo:

Measure parameters: 20 times at each point for contact discharge; 20 times at each point for air discharge. 1 second interval for each discharge.

Type of discharge	Test level	Test point	Required	Observation	Result
Contact to EUT	±4kV	Front, Back, Left Right, Top, Bottom	B	B	Pass
Contact to coupling planes	±4kV	Front, Back, Left Right	B	A	Pass
Air	±2 kV /±4 kV /±8kV	Front, Back, Left Right, Top, Bottom	B	B	Pass

Observation description:
A: Normal performance within limits specified by the manufacturer requestor or purchaser.
B: Temporary loss of function or degradation of performance which ceases after the disturbance ceases, and from which the equipment under test recovers its normal performance, without operator intervention.

Sample No.: A260701066003	Mode 2: Working
Test voltage: DC 5V	Memo:

Measure parameters: 20 times at each point for contact discharge; 20 times at each point for air discharge. 1 second interval for each discharge.

Type of discharge	Test level	Test point	Required	Observation	Result
Contact to EUT	±4kV	Front, Back, Left Right, Top, Bottom	B	B	Pass
Contact to coupling planes	±4kV	Front, Back, Left Right	B	A	Pass
Air	±2 kV /±4 kV /±8kV	Front, Back, Left Right, Top, Bottom	B	B	Pass

Observation description:
A: Normal performance within limits specified by the manufacturer requestor or purchaser.
B: Temporary loss of function or degradation of performance which ceases after the disturbance ceases, and from which the equipment under test recovers its normal performance, without operator intervention.

DRAFT

Shenzhen LCS Compliance Testing Laboratory Ltd.
Add: Room 101, 201, Building A and Room 301, Building C, Juji Industrial Park, Yabianxueziwei, Shajing Street, Bao'an District, Shenzhen, Guangdong, China
Tel: +(86) 0755-82591330 | E-mail: webmaster@lcs-cert.com | Web: www.lcs-cert.com
Scan code to check authenticity

6.2 Continuous Radio Frequency Disturbances Test

6.2.1 Limits

Swept frequency test		Performance Criteria
Frequency (MHz)	80 to 1000	A
Field Strength	3V/m rms voltage level of the unmodulated signal	
Modulation	AM modulated to a depth of 80% by a sine wave of ☒1 kHz, ☐400 Hz (note 1)	
Step Size	1% increments	
Dwell time	≤5 Sec.	
Spot frequency test		**Performance Criteria**
Frequency (MHz)	1800, 2600, 3500, 5000	A
Field Strength	3V/m rms voltage level of the unmodulated signal	
Modulation	AM modulated to a depth of 80% by a sine wave of ☒1 kHz, ☐400 Hz (note 1)	
Dwell time	≤5 Sec.	
Performance criteria A description for other devices: During and after the test the EUT shall continue to operate as intended without operator intervention. No degradation of performance or loss of function is allowed below a minimum performance level specified by the manufacturer when the EUT is used as intended.		

6.2.2 Test procedure

The field sensor is placed on the EUT table (Ground clearance height reference "block diagram of test setup") which is 3 meters away from the transmitting antenna. Through the signal generator, power amplifier and transmitting antenna to produce a uniformity field strength around the EUT table from frequency range specified and records the signal generator ‘s output level at the same time for whole measured frequency range. Then, put EUT and its simulators on the EUT turn table and keep them 3 meters away from the transmitting antenna which is mounted on an antenna tower and fixes at 1 meter height above the ground. Using the recorded signal generator’s output level to measure the EUT from frequency range specified and both horizontal & vertical polarization of antenna must be set and measured. Each of the four sides of EUT must be faced this transmitting antenna and measures individually.

6.2.3 Test Setup Diagram

N/A

DRAFT

Shenzhen LCS Compliance Testing Laboratory Ltd.
Add: Room 101, 201, Building A and Room 301, Building C, Juji Industrial Park, Yabianxueziwei, Shajing Street, Bao’an District, Shenzhen, Guangdong, China
Tel: +(86) 0755-82591330 | E-mail: webmaster@lcs-cert.com | Web: www.lcs-cert.com
Scan code to check authenticity

6.2.4 Test data

Operating Environment:			
Test Site:	RF FIELD STRENGTH SUSCEPTIBILITY TEST（UP TO 10V/m)	Test Engineer	Xing Jin Mo
Temperature:	24.8° C	Humidity:	52%RH
Memo:	/		

Sample No.: A260701066003	Mode 1: SA mode
Test voltage: DC 9V	Memo:

Steps: 1%, Dwell time 1s, 1kHz 80% AM modulation

Test frequency	Level	EUT position	Antenna polarization	Required	Observation	Result
80MHz to 1000MHz	3V/m	Front	H	A	A	Pass
			V	A	A	Pass
		Left	H	A	A	Pass
			V	A	A	Pass
		Rear	H	A	A	Pass
			V	A	A	Pass
		Right	H	A	A	Pass
			V	A	A	Pass
1800MHz 2600MHz 3500MHz 5000MHz	3V/m	Front	H	A	A	Pass
			V	A	A	Pass
		Left	H	A	A	Pass
			V	A	A	Pass
		Rear	H	A	A	Pass
			V	A	A	Pass
		Right	H	A	A	Pass
			V	A	A	Pass

Observation description:
A: Normal performance within limits specified by the manufacturer requestor or purchaser.

Sample No.: A260701066003	Mode 2: Working
Test voltage: DC 5V	Memo:

Steps: 1%, Dwell time 1s, 1kHz 80% AM modulation

Test frequency	Level	EUT position	Antenna polarization	Required	Observation	Result
80MHz to 1000MHz	3V/m	Front	H	A	A	Pass
			V	A	A	Pass
		Left	H	A	A	Pass
			V	A	A	Pass
		Rear	H	A	A	Pass

Shenzhen LCS Compliance Testing Laboratory Ltd.
Add: Room 101, 201, Building A and Room 301, Building C, Juji Industrial Park, Yabianxueziwei, Shajing Street, Bao'an District, Shenzhen, Guangdong, China
Tel: +(86) 0755-82591330 | E-mail: webmaster@lcs-cert.com | Web: www.lcs-cert.com
Scan code to check authenticity

DRAFT

			V	A	A	Pass
		Right	H	A	A	Pass
			V	A	A	Pass
1800MHz 2600MHz 3500MHz 5000MHz	3V/m	Front	H	A	A	Pass
			V	A	A	Pass
		Left	H	A	A	Pass
			V	A	A	Pass
		Rear	H	A	A	Pass
			V	A	A	Pass
		Right	H	A	A	Pass
			V	A	A	Pass
Observation description: A: Normal performance within limits specified by the manufacturer requestor or purchaser.						

DRAFT

Shenzhen LCS Compliance Testing Laboratory Ltd.
Add: Room 101, 201, Building A and Room 301, Building C, Juji Industrial Park, Yabianxueziwei, Shajing Street, Bao'an District, Shenzhen, Guangdong, China
Tel: +(86) 0755-82591330 | E-mail: webmaster@lcs-cert.com | Web: www.lcs-cert.com
Scan code to check authenticity

6.3 Electrical Fast Transients(EFT) Test

6.3.1 Limits

Test Level			Performance Criteria
Test voltage	±1kVfor AC mains port	±0.5kV for dc input or signal port	B
Repetition Frequency	5kHz	5kHz	
Burst Duration	15ms	15ms	
Burst Period	300ms	300ms	
Inject Time(s)	120s	120s	
Inject Method	Direct for AC mains port	Capacitive coupling clamp or CDN	
Inject Line	AC mains	Analogue/digital data ports, and DC network power ports	
Note: This test shall be additionally performed on analogue/digital data ports, and DC network power ports, of radio equipment and associated ancillary equipment, if the cables may be longer than 3 m. Performance criteria B description: During the test, degradation of performance is allowed. However, no change of operating state or stored data is allowed to persist after the test. After the test, the EUT shall continue to operate as intended without operator intervention. No degradation of performance or loss of function is allowed, after the application of the phenomena below a performance level specified by the manufacturer, when the EUT is used as intended.			

6.3.2 Test procedure

The EUT and its simulators were placed on the ground reference plane and were insulated from it by a wood support 0.1m ± 0.01m thick. The ground reference plane was 1m*1m metallic sheet with 0.65mm minimum thickness. This reference ground plane was project beyond the EUT by at least 0.1m on all sides and the minimum distance between EUT and all other conductive structure, except the ground plane was more than 0.5m. All cables to the EUT was placed on the wood support, cables not subject to EFT/B was routed as far as possible from the cable under test to minimize the coupling between the cables.

For DC input and AC power ports:

The EUT was connected to the power mains by using a coupling device that couples the EFT interference signal to AC or DC power lines. Both positive transients and negative transients of test voltage were applied during compliance test and the duration of the test can't less than 2mins.

For analogue/digital data ports:

The capacitive coupling clamp was connected to the power by using a coupling device that couples the EFT interference signal to capacitive coupling clamp. Both positive transients and negative transients of test voltage were applied during compliance test and the duration of the test can't less than 2mins.

Shenzhen LCS Compliance Testing Laboratory Ltd.
Add: Room 101, 201, Building A and Room 301, Building C, Juji Industrial Park, Yabianxueziwei, Shajing Street, Bao'an District, Shenzhen, Guangdong, China
Tel: +(86) 0755-82591330 | E-mail: webmaster@lcs-cert.com | Web: www.lcs-cert.com
Scan code to check authenticity

DRAFT

6.3.3 Test Setup Diagram

For power port (Note: if the DC network power cable may be lengths greater than 3 m, the requirement is applicable).

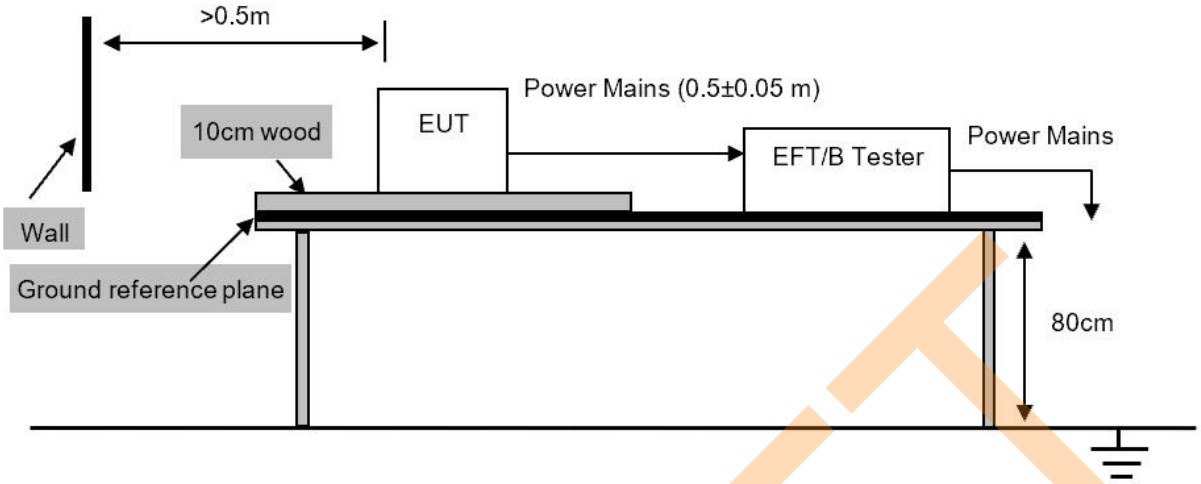

For analogue/digital data ports, if the cables may be longer than 3 m.

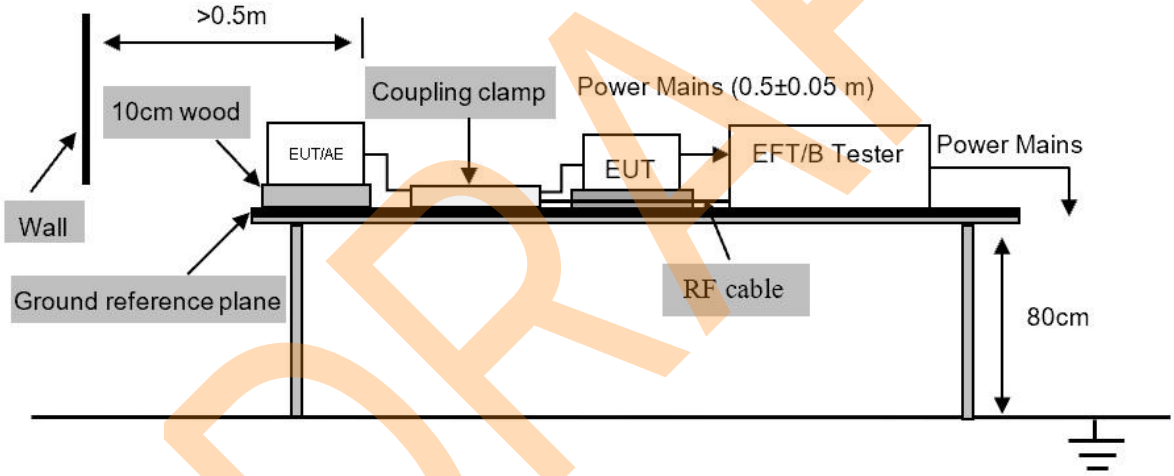

DRAFT

Shenzhen LCS Compliance Testing Laboratory Ltd.
Add: Room 101, 201, Building A and Room 301, Building C, Juji Industrial Park, Yabianxueziwei, Shajing Street, Bao'an District, Shenzhen, Guangdong, China
Tel: +(86) 0755-82591330 | E-mail: webmaster@lcs-cert.com | Web: www.lcs-cert.com
Scan code to check authenticity

6.3.4 Test data

Operating Environment:			
Test Site:	ELECTRICAL FAST TRANSIENT/BURST IMMUNITY TEST（UP TO 4KV)	Test Engineer	Xing Jin Mo
Temperature:	23.6° C	Humidity:	52.2%RH
Memo:	/		

Sample No.: A260701066003	Mode 1: SA mode
Test voltage: DC 9V	Memo:

Test burst parameters: Burst period 300ms, Durations 15ms, Repetition frequency 5kHz

Port/Coupling	Line	Test voltage	Test time(s)	Required	Observation	Result
AC Mains/ Direct	L	+1kV	120	B	B	Pass
		-1kV	120	B	B	Pass
	N	+1kV	120	B	B	Pass
		-1kV	120	B	B	Pass
	L-N	+1kV	120	B	B	Pass
		-1kV	120	B	B	Pass

Observation description:
B: Temporary loss of function or degradation of performance which ceases after the disturbance ceases, and from which the equipment under test recovers its normal performance, without operator intervention.

DRAFT

Shenzhen LCS Compliance Testing Laboratory Ltd.
Add: Room 101, 201, Building A and Room 301, Building C, Juji Industrial Park, Yabianxueziwei, Shajing Street, Bao'an District, Shenzhen, Guangdong, China
Tel: +(86) 0755-82591330 | E-mail: webmaster@lcs-cert.com | Web: www.lcs-cert.com
Scan code to check authenticity

6.4 Surge Test

6.4.1 Limits

Test level for AC mains ports		Performance Criterion
Line to Line	1 kV 1.2/50(8/20) μs	B
DC network power port		Performance Criterion
Line to reference ground	0.5 kV 1.2/50(8/20) μs	B
Note: Applicable only to ports which, according to the manufacturer's specification,1. The cable lengths greater than 3m; 2. May connect directly to outdoor cables.		
Performance criteria B description: During the test, degradation of performance is allowed. However, no change of operating state or stored data is allowed to persist after the test. After the test, the EUT shall continue to operate as intended without operator intervention. No degradation of performance or loss of function is allowed, after the application of the phenomena below a performance level specified by the manufacturer, when the EUT is used as intended. Performance criteria B description: Temporary loss of function or degradation of performance, the correction of which requires operator intervention.		

6.4.2 Test procedure

For line-to- nature coupling mode, provide a 1 kV 1.2/50 us voltage surge (at pen-circuit condition) and 8/20 us current surge to EUT selected points.

For line-to- ground coupling mode, provide a 2 kV 1.2/50 us voltage surge (at pen-circuit condition) and 8/20 us current surge to EUT selected points.

At least 5 positive and 5 negative (polarity) tests with a maximum 1-minute repetition rate are applied during test.
Different phase angles are done individually.

For other surge test, each line of internet port to ground coupling mode, provide a combination wave specified above table.

At least 5 positive and 5 negative (polarity) tests with a maximum 1-minute repetition rate are applied during test.

Record the EUT operating situation during compliance test and decide the EUT immunity criterion for above each test.

Shenzhen LCS Compliance Testing Laboratory Ltd.
Add: Room 101, 201, Building A and Room 301, Building C, Juji Industrial Park, Yabianxueziwei, Shajing Street, Bao'an District, Shenzhen, Guangdong, China
Tel: +(86) 0755-82591330 | E-mail: webmaster@lcs-cert.com | Web: www.lcs-cert.com
Scan code to check authenticity

DRAFT

6.4.3 Test Setup Diagram

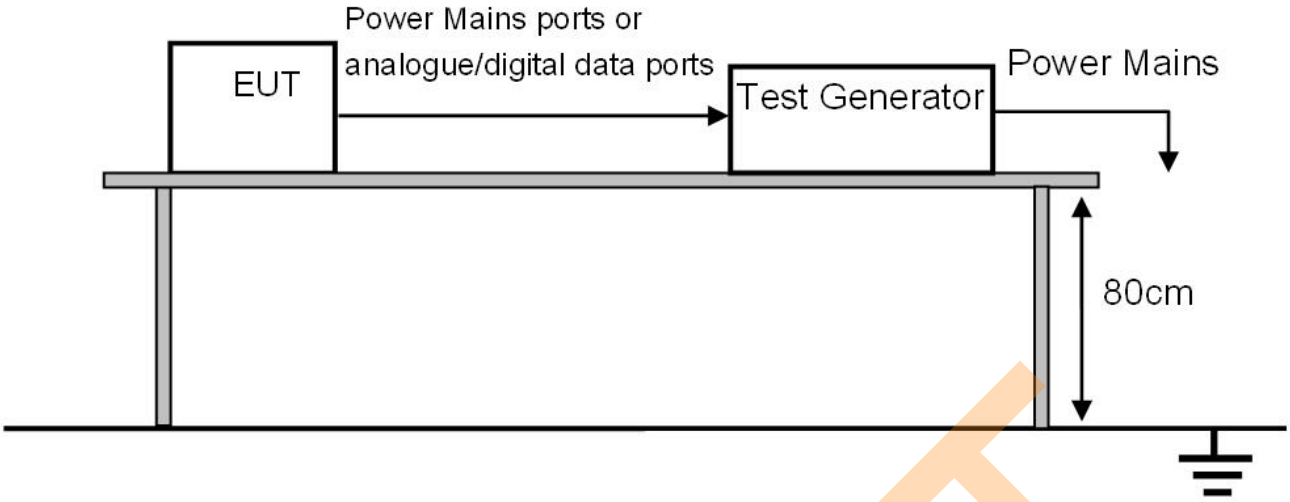

DRAFT

Shenzhen LCS Compliance Testing Laboratory Ltd.
Add: Room 101, 201, Building A and Room 301, Building C, Juji Industrial Park, Yabianxueziwei, Shajing Street, Bao'an District, Shenzhen, Guangdong, China
Tel: +(86) 0755-82591330 | E-mail: webmaster@lcs-cert.com | Web: www.lcs-cert.com
Scan code to check authenticity

6.4.4 Test data

Operating Environment:			
Test Site:	Surges IMMUNITY TEST	Test Engineer	Xing Jin Mo
Temperature:	23.6° C	Humidity:	52.1%RH
Memo:	/		

Sample No.: A260701066003	Mode 1: SA mode
Test voltage: DC 9V	Memo:

Test wave parameters: Wave type: 1.2/50us-8/20us; Voltage phase: 90°, 270°; Pulse times: 5 times at each polarity; Pulse interval: 60s

Line/Port	Internal impedance	Test voltage	Required	Observation	Result
L-N	2Ω	+0.5kV	B	B	Pass
	2Ω	-0.5kV	B	B	Pass
L-N	2Ω	+1kV	B	B	Pass
	2Ω	-1kV	B	B	Pass

Observation description:

B: Temporary loss of function or degradation of performance which ceases after the disturbance ceases, and from which the equipment under test recovers its normal performance, without operator intervention.

DRAFT

Shenzhen LCS Compliance Testing Laboratory Ltd.
Add: Room 101, 201, Building A and Room 301, Building C, Juji Industrial Park, Yabianxueziwei, Shajing Street, Bao'an District, Shenzhen, Guangdong, China
Tel: +(86) 0755-82591330 | E-mail: webmaster@lcs-cert.com | Web: www.lcs-cert.com
Scan code to check authenticity

6.5 Continuous Conducted Disturbances Test

6.5.1 Limits

Test Level		Performance Criteria
Frequency and Field Strength	0.15 MHz to 10 MHz, 3V rms voltage level of the unmodulated signal	A
	10 MHz to 30 MHz, 3V to 1V rms voltage level of the unmodulated signal	
	30 MHz to 80 MHz, 1V rms voltage level of the unmodulated signal	
Modulation	AM modulated to a depth of 80% by a sine wave of ☒1 kHz, ☐400 Hz (note 1)	
Step Size	1% increments	
Dwell time	≤5 Sec.	
Note 1: This test shall be additionally performed on analogue/digital data ports, DC network power ports of equipment, if the cables may be longer than 3 m. Performance criteria A description for other devices: During and after the test the EUT shall continue to operate as intended without operator intervention. No degradation of performance or loss of function is allowed below a minimum performance level specified by the manufacturer when the EUT is used as intended.		

6.5.2 Test procedure

The EUT are placed on an insulating support 0.1m high above a ground reference plane. CDN (coupling and decoupling device) is placed on the ground plane about 0.3m from EUT. Cables between CDN and EUT are as short as possible, and their height above the ground reference plane shall be between 30 and 50 mm (where possible).

The disturbance signal described below is injected to EUT through CDN.

The EUT operates within its operational mode(s) under intended climatic conditions after power on.

Use the frequency range specified by the standard, interference signal level, and interference signal for testing.

The step size shall not exceed 1% of the start and thereafter 1% of the preceding frequency value.

Recording the EUT operating situation during compliance testing and decide the EUT immunity criterion.

Shenzhen LCS Compliance Testing Laboratory Ltd.
Add: Room 101, 201, Building A and Room 301, Building C, Juji Industrial Park, Yabianxueziwei, Shajing Street, Bao'an District, Shenzhen, Guangdong, China
Tel: +(86) 0755-82591330 | E-mail: webmaster@lcs-cert.com | Web: www.lcs-cert.com
Scan code to check authenticity

6.5.3 Test Setup Diagram

For power port (Note: if the DC network power cable may be lengths greater than 3 m, the requirement is applicable).

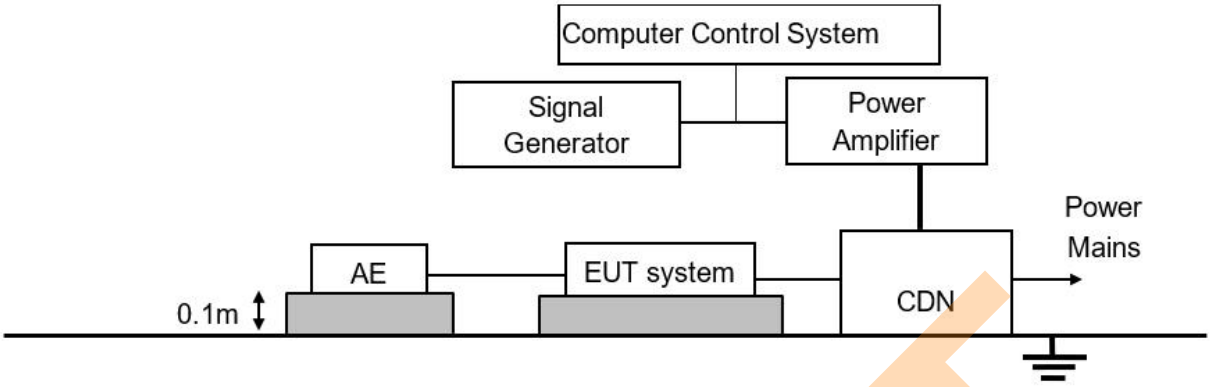

For signal/wired network/control ports, if the cables may be longer than 3 m.

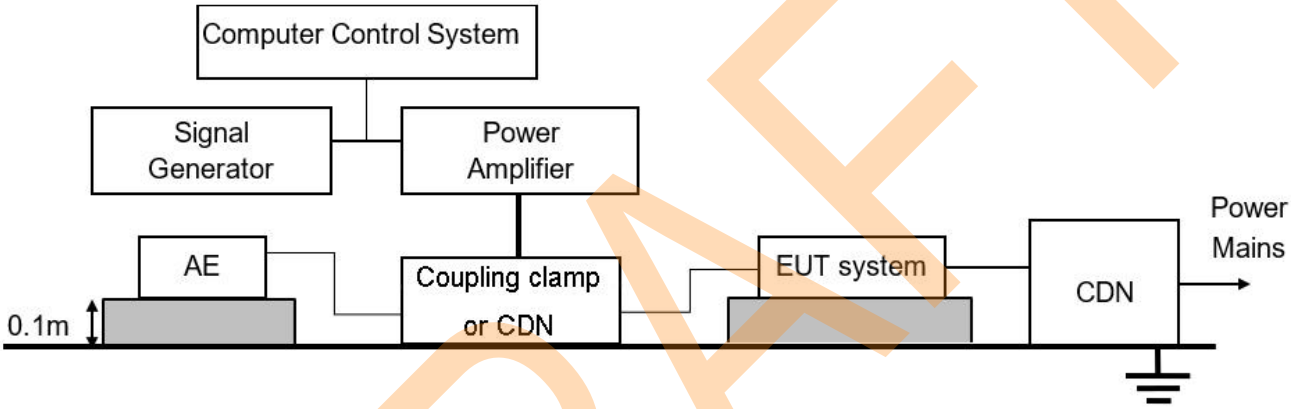

DRAFT

Shenzhen LCS Compliance Testing Laboratory Ltd.
Add: Room 101, 201, Building A and Room 301, Building C, Juji Industrial Park, Yabianxueziwei, Shajing Street, Bao'an District, Shenzhen, Guangdong, China
Tel: +(86) 0755-82591330 | E-mail: webmaster@lcs-cert.com | Web: www.lcs-cert.com
Scan code to check authenticity

6.5.4 Test data

Operating Environment:			
Test Site:	INJECTED CURRENTS SUSCEPTIBILITY TEST （150kHz-230MHz）	Test Engineer	Xing Jin Mo
Temperature:	23.6° C	Humidity:	52.2%RH
Memo:	/		

Sample No.: A260701066003	Mode 1: SA mode
Test voltage: DC 9V	Memo:

Test steps: 1%, Dwell time 1s, 1kHz 80% AM modulation

Test frequency	Injected Position	Strength	Required	Observation	Result
0.15MHz to 10MHz	AC Port	3V	A	A	Pass
10MHz to 30MHz	AC Port	3V to 1V	A	A	Pass
30MHz to 80MHz	AC Port	1V	A	A	Pass

Observation Description:
A: Normal performance within limits specified by the manufacturer requestor or purchaser;

DRAFT

Shenzhen LCS Compliance Testing Laboratory Ltd.
Add: Room 101, 201, Building A and Room 301, Building C, Juji Industrial Park, Yabianxueziwei, Shajing Street, Bao'an District, Shenzhen, Guangdong, China
Tel: +(86) 0755-82591330 | E-mail: webmaster@lcs-cert.com | Web: www.lcs-cert.com
Scan code to check authenticity

6.6 Voltage Dips and Interruptions Test

6.6.1 Limits

Test Level%UT	Duration(in period)	PerformanceCriterion
＜5	0.5	B
70	25 for 50Hz/30 for 60Hz	C
＜5	250 for 50Hz/300 for 60Hz	C

Performance criteria B description: During the test, degradation of performance is allowed. However, no change of operating state or stored data is allowed to persist after the test. After the test, the EUT shall continue to operate as intended without operator intervention. No degradation of performance or loss of function is allowed, after the application of the phenomena below a performance level specified by the manufacturer, when the EUT is used as intended.
Performance criteria C description: During and after testing, a temporary loss of function is allowed, provided the function is self recoverable, or can be restored by the operation of the controls or cycling of the power to the EUT by the user in accordance with the manufacturer's instructions. Functions, and/or information stored in non-volatile memory, or protected by a battery backup, shall not be lost.

6.6.2 Test procedure

The EUT and test generator were setup as shown. The interruptions are introduced at selected phase angles with specified duration. Record any degradation of performance.

6.6.3 Test Setup Diagram

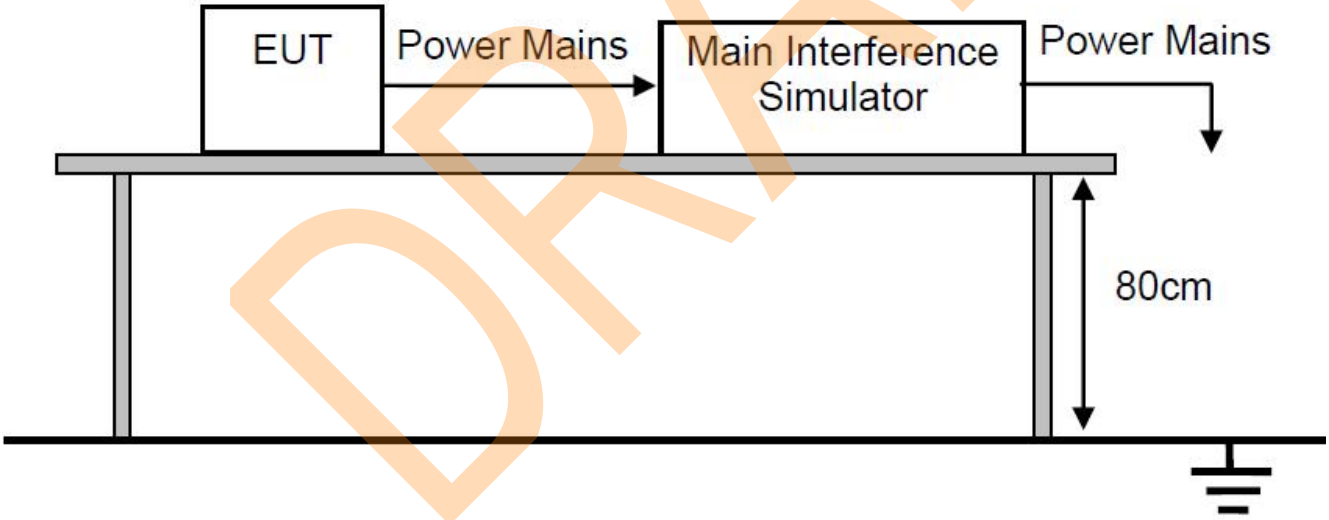

Shenzhen LCS Compliance Testing Laboratory Ltd.
Add: Room 101, 201, Building A and Room 301, Building C, Juji Industrial Park, Yabianxueziwei, Shajing Street, Bao'an District, Shenzhen, Guangdong, China
Tel: +(86) 0755-82591330 | E-mail: webmaster@lcs-cert.com | Web: www.lcs-cert.com
Scan code to check authenticity

6.6.4 Test data

Operating Environment:			
Test Site:	VOLTAGE DIPS AND INTERRUPTIONS TEST	Test Engineer	Xing Jin Mo
Temperature:	23.6° C	Humidity:	52.2%RH
Memo:	/		

Sample No.: A260701066003	Mode 1: SA mode
Test voltage: DC 9V	Memo:

Voltage Dips & Short Interruptions %U_T	Duration (in period)	Phase Angle	Required	Observation	Result
0	0.5P	0° to 360°	B	B	Pass
70	25P	0° to 360°	C	C	Pass
0	250P	0° to 360°	C	C	Pass

Observation description:
B: Temporary loss of function or degradation of performance which ceases after the disturbance ceases, and from which the equipment under test recovers its normal performance, without operator intervention.
C: Temporary loss of function or degradation of performance, the correction of which requires operator intervention.

DRAFT

Shenzhen LCS Compliance Testing Laboratory Ltd.
Add: Room 101, 201, Building A and Room 301, Building C, Juji Industrial Park, Yabianxueziwei, Shajing Street, Bao'an District, Shenzhen, Guangdong, China
Tel: +(86) 0755-82591330 | E-mail: webmaster@lcs-cert.com | Web: www.lcs-cert.com
Scan code to check authenticity

7. TEST SETUP PHOTOS

Conducted disturbance at mains terminals

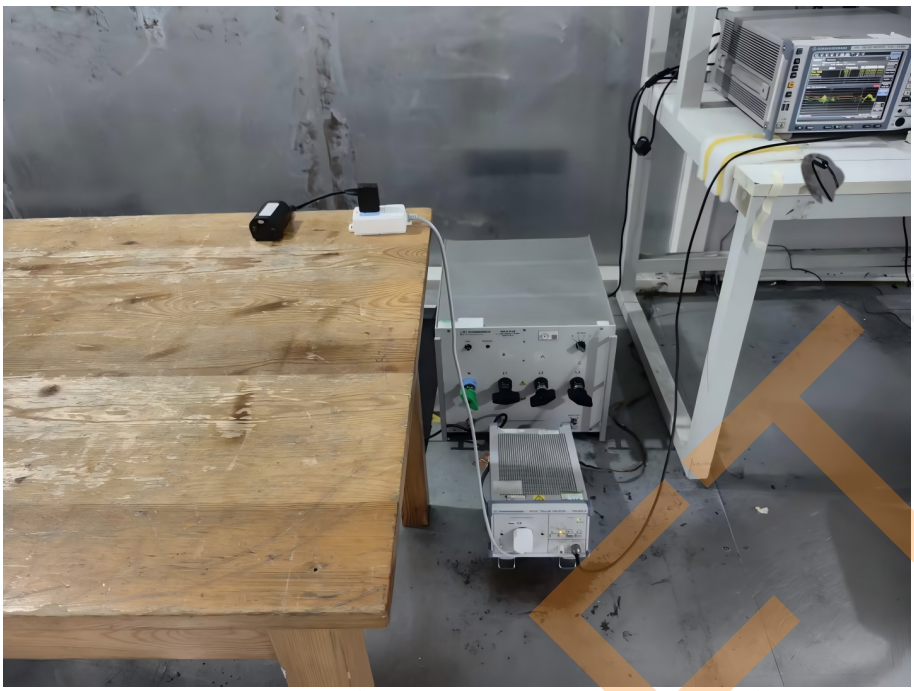

Radiated Emissions(30-1000MHz)

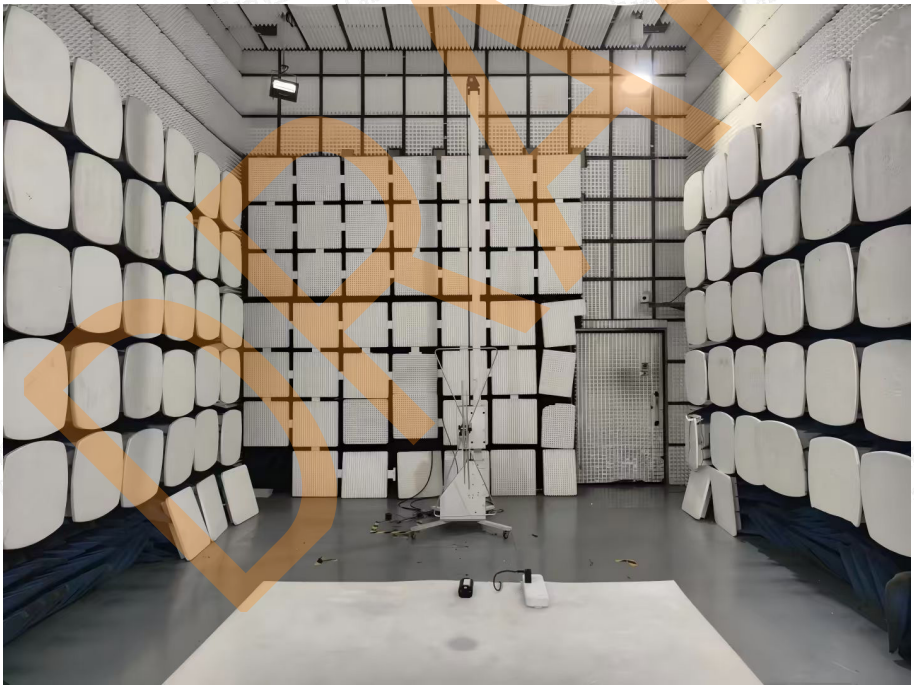

Shenzhen LCS Compliance Testing Laboratory Ltd.
Add: Room 101, 201, Building A and Room 301, Building C, Juji Industrial Park, Yabianxueziwei, Shajing Street, Bao'an District, Shenzhen, Guangdong, China
Tel: +(86) 0755-82591330 | E-mail: webmaster@lcs-cert.com | Web: www.lcs-cert.com
Scan code to check authenticity

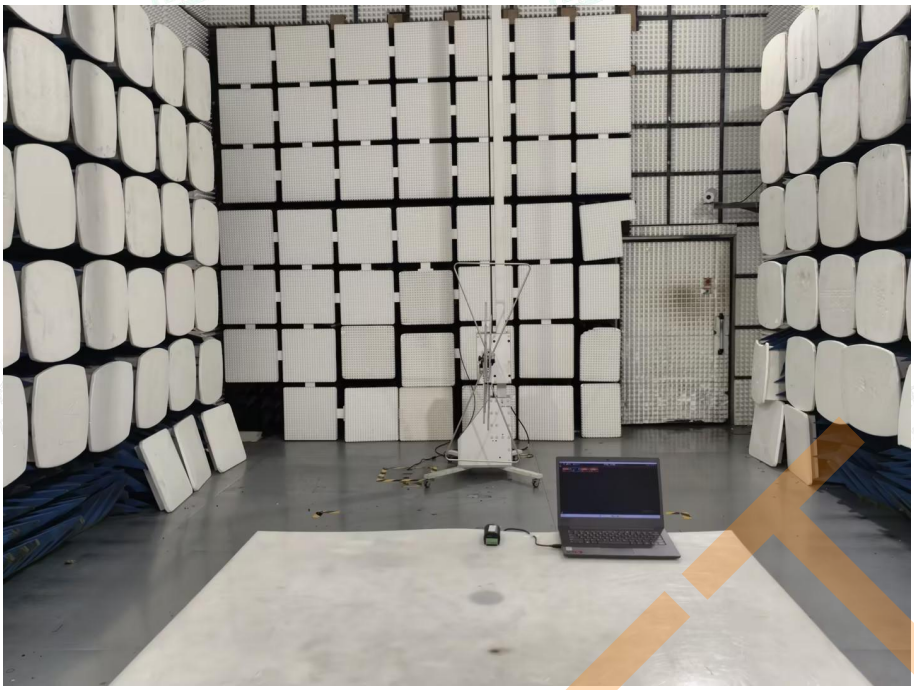

Voltage Fluctuations& Flicker Test

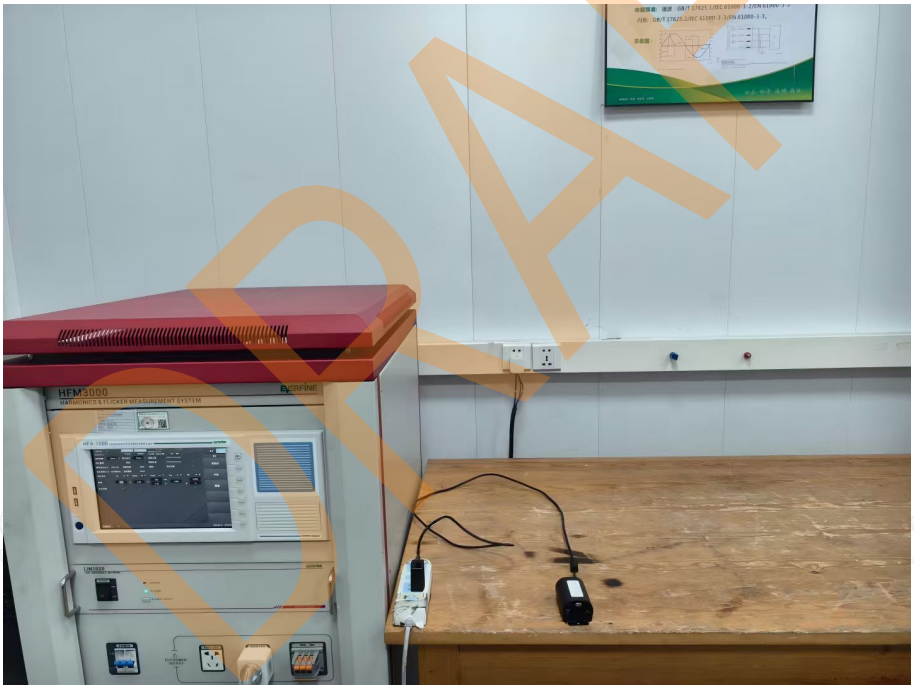

Shenzhen LCS Compliance Testing Laboratory Ltd.
Add: Room 101, 201, Building A and Room 301, Building C, Juji Industrial Park, Yabianxueziwei, Shajing Street, Bao'an District, Shenzhen, Guangdong, China
Tel: +(86) 0755-82591330 | E-mail: webmaster@lcs-cert.com | Web: www.lcs-cert.com
Scan code to check authenticity

Electrostatic Discharge Test

Shenzhen LCS Compliance Testing Laboratory Ltd.
Add: Room 101, 201, Building A and Room 301, Building C, Juji Industrial Park, Yabianxueziwei, Shajing Street, Bao'an District, Shenzhen, Guangdong, China
Tel: +(86) 0755-82591330 | E-mail: webmaster@lcs-cert.com | Web: www.lcs-cert.com
Scan code to check authenticity

Continuous Radio Frequency Disturbances Test

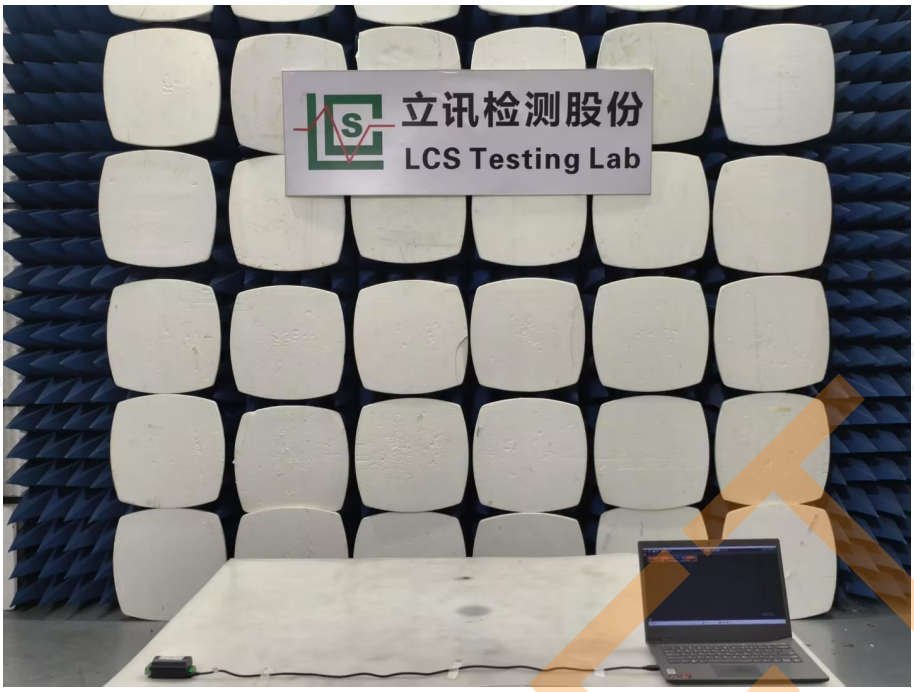

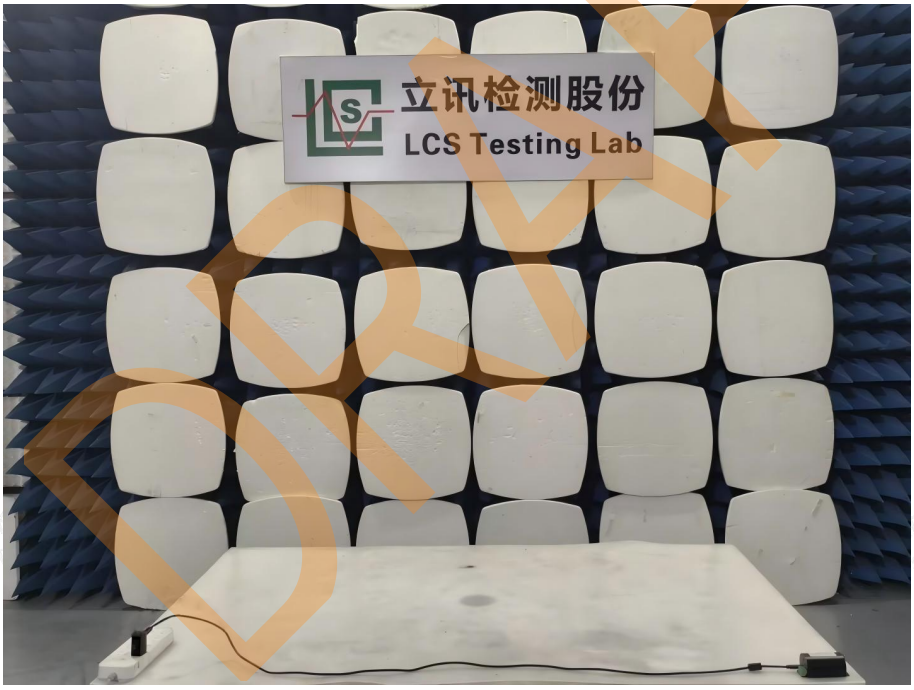

Shenzhen LCS Compliance Testing Laboratory Ltd.
Add: Room 101, 201, Building A and Room 301, Building C, Juji Industrial Park, Yabianxueziwei, Shajing Street, Bao'an District, Shenzhen, Guangdong, China
Tel: +(86) 0755-82591330 | E-mail: webmaster@lcs-cert.com | Web: www.lcs-cert.com
Scan code to check authenticity

Electrical Fast Transients(EFT) Test

Surge Test

Shenzhen LCS Compliance Testing Laboratory Ltd.
Add: Room 101, 201, Building A and Room 301, Building C, Juji Industrial Park, Yabianxueziwei, Shajing Street, Bao'an District, Shenzhen, Guangdong, China
Tel: +(86) 0755-82591330 | E-mail: webmaster@lcs-cert.com | Web: www.lcs-cert.com
Scan code to check authenticity

Continuous Conducted Disturbances Test

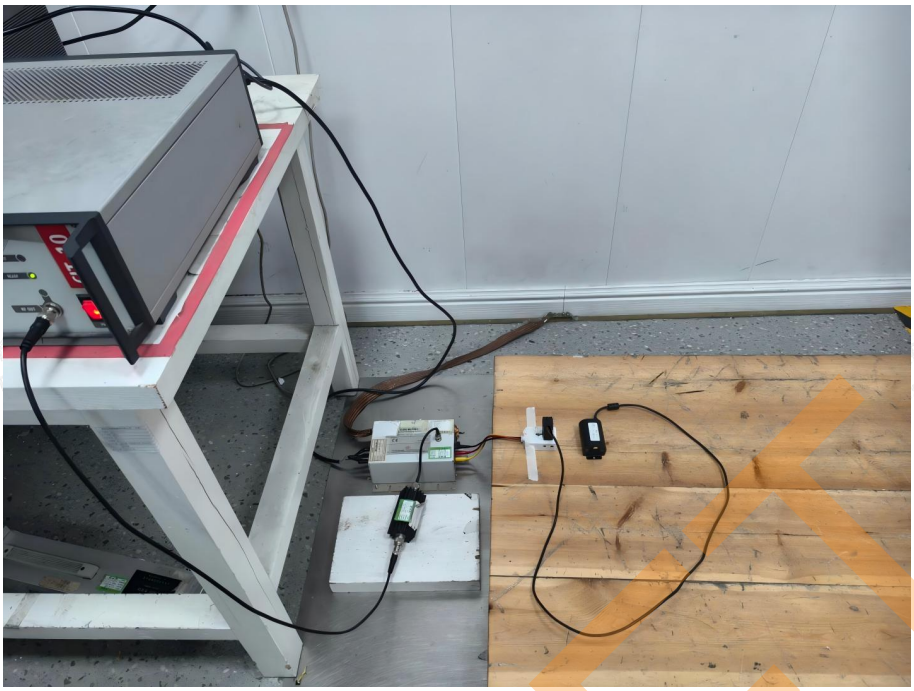

Voltage Dips and Interruptions Test

DRAFT

Shenzhen LCS Compliance Testing Laboratory Ltd.
Add: Room 101, 201, Building A and Room 301, Building C, Juji Industrial Park, Yabianxueziwei, Shajing Street, Bao'an District, Shenzhen, Guangdong, China
Tel: +(86) 0755-82591330 | E-mail: webmaster@lcs-cert.com | Web: www.lcs-cert.com
Scan code to check authenticity

8. EUT CONSTRUCTIONAL DETAILS (EUT PHOTOS)

Fig. 1

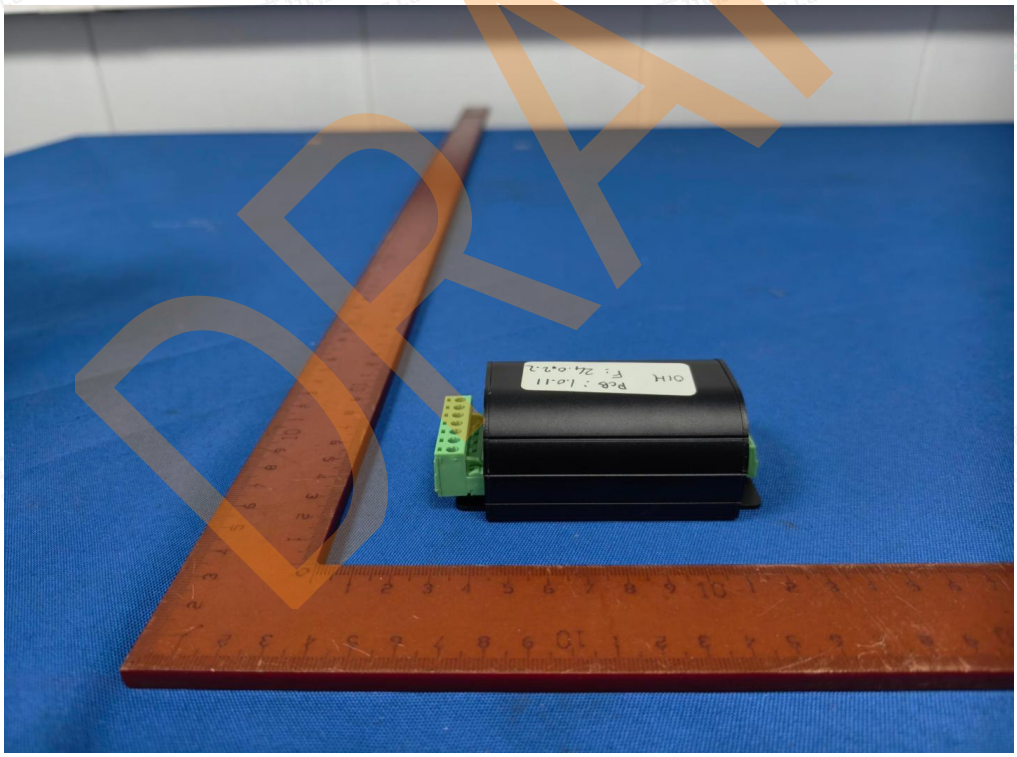

Fig. 2

Shenzhen LCS Compliance Testing Laboratory Ltd.
Add: Room 101, 201, Building A and Room 301, Building C, Juji Industrial Park, Yabianxueziwei, Shajing Street, Bao'an District, Shenzhen, Guangdong, China
Tel: +(86) 0755-82591330 | E-mail: webmaster@lcs-cert.com | Web: www.lcs-cert.com
Scan code to check authenticity

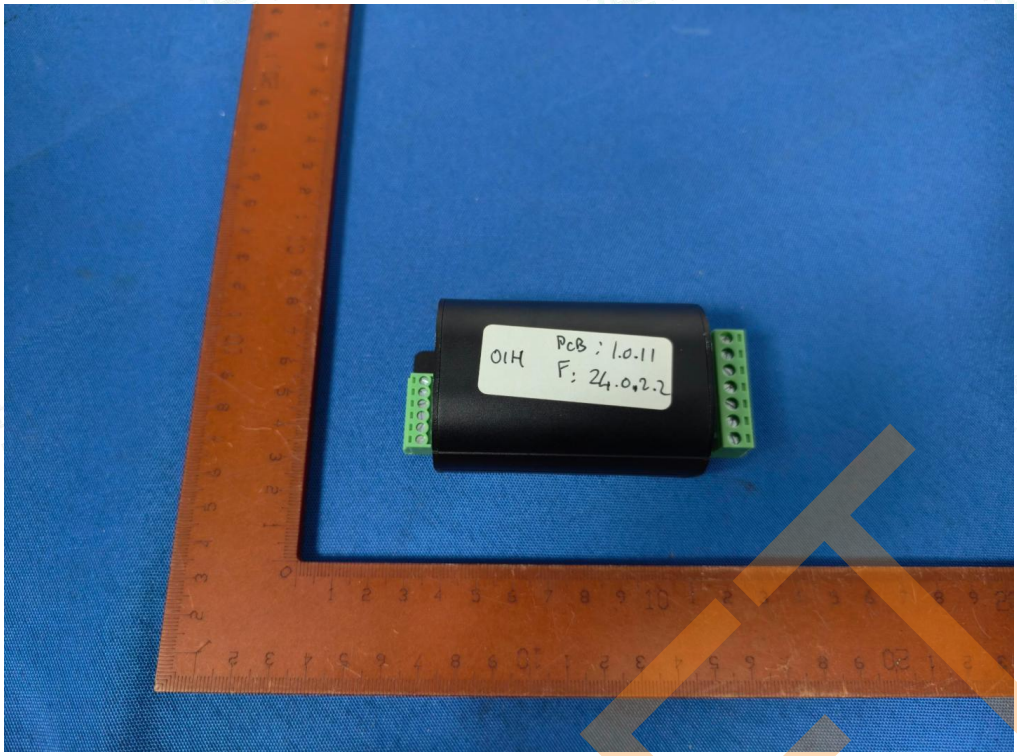

Fig. 3

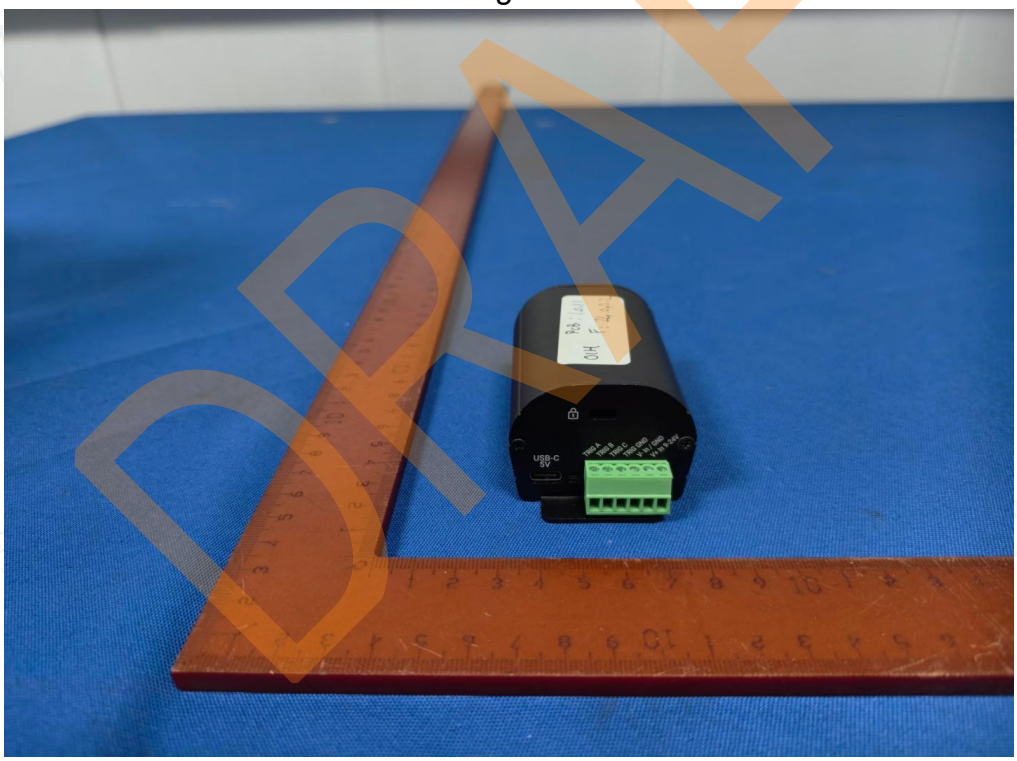

Fig. 4

DRAFT

Shenzhen LCS Compliance Testing Laboratory Ltd.
Add: Room 101, 201, Building A and Room 301, Building C, Juji Industrial Park, Yabianxueziwei, Shajing Street, Bao'an District, Shenzhen, Guangdong, China
Tel: +(86) 0755-82591330 | E-mail: webmaster@lcs-cert.com | Web: www.lcs-cert.com
Scan code to check authenticity

Fig. 5

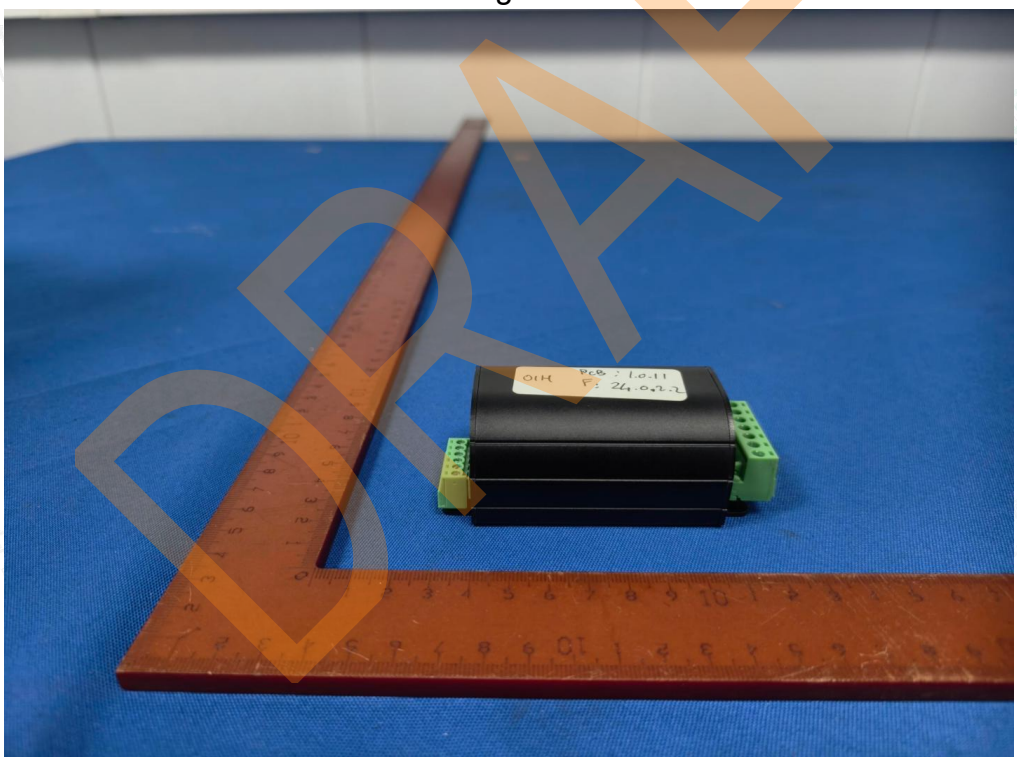

Fig. 6

DRAFT

Shenzhen LCS Compliance Testing Laboratory Ltd.
Add: Room 101, 201, Building A and Room 301, Building C, Juji Industrial Park, Yabianxueziwei, Shajing Street, Bao'an District, Shenzhen, Guangdong, China
Tel: +(86) 0755-82591330 | E-mail: webmaster@lcs-cert.com | Web: www.lcs-cert.com
Scan code to check authenticity

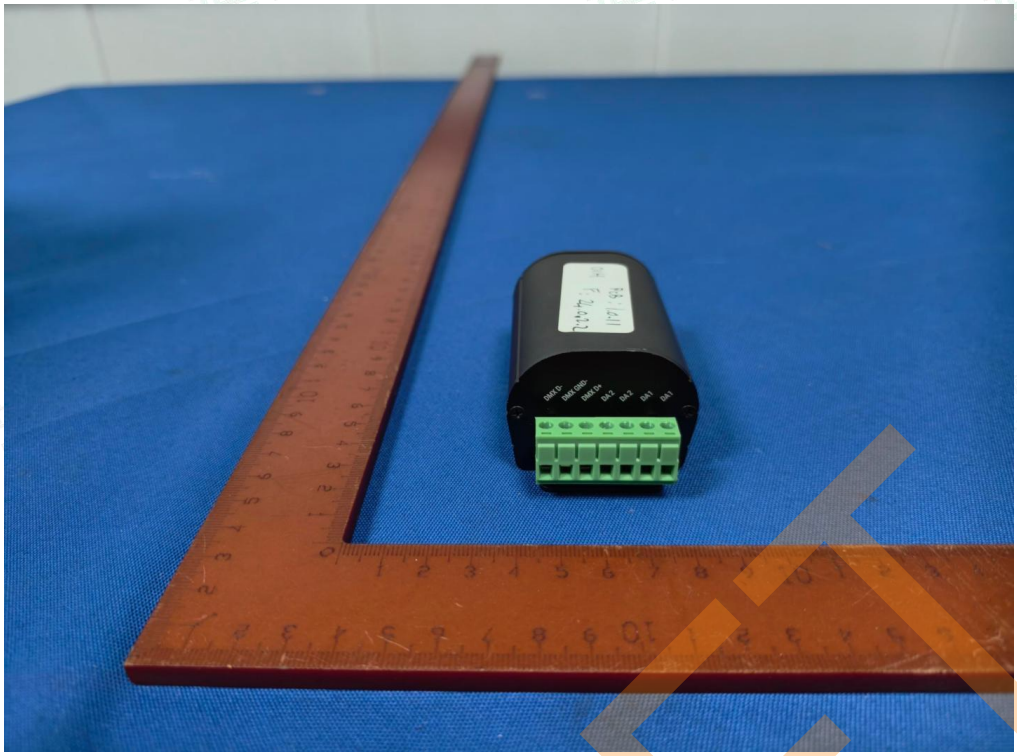

Fig. 7

Fig. 8

DRAFT

Shenzhen LCS Compliance Testing Laboratory Ltd.
Add: Room 101, 201, Building A and Room 301, Building C, Juji Industrial Park, Yabianxueziwei, Shajing Street, Bao'an District, Shenzhen, Guangdong, China
Tel: +(86) 0755-82591330 | E-mail: webmaster@lcs-cert.com | Web: www.lcs-cert.com
Scan code to check authenticity

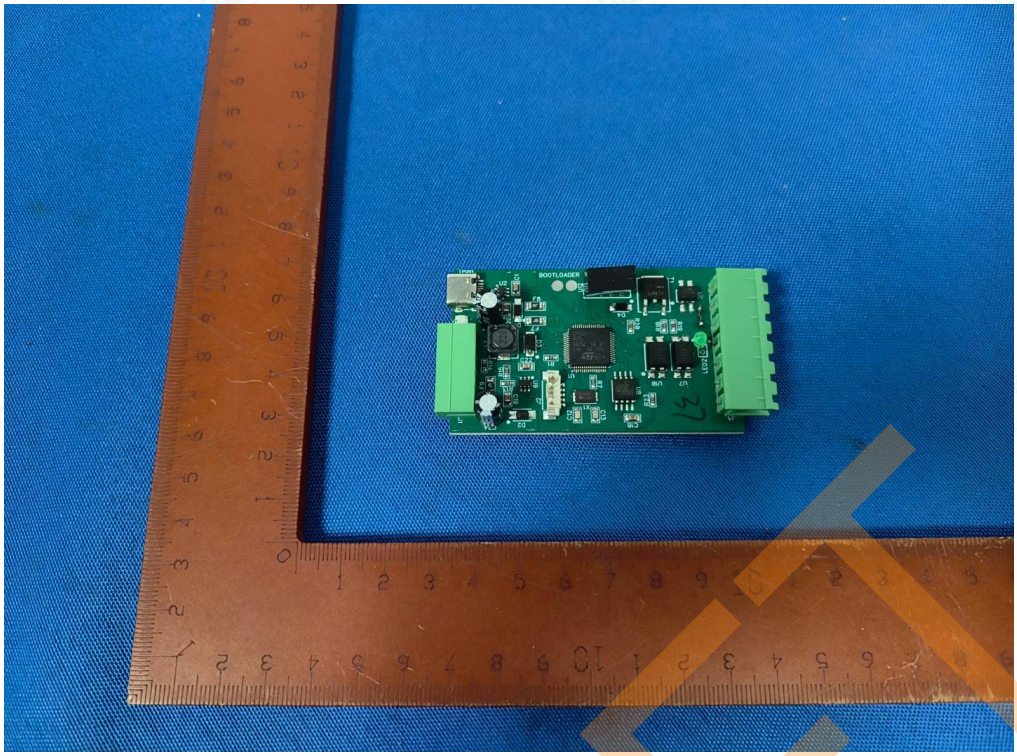

Fig. 9

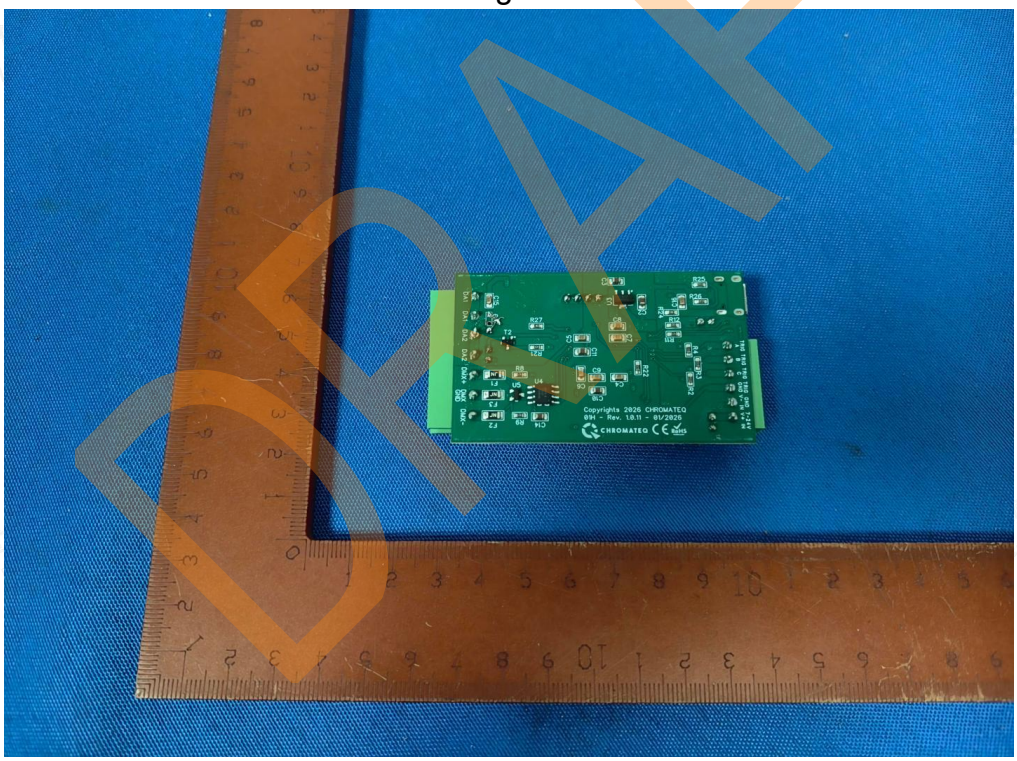

Fig. 10

----------End Report----------

Shenzhen LCS Compliance Testing Laboratory Ltd.
Add: Room 101, 201, Building A and Room 301, Building C, Juji Industrial Park, Yabianxueziwei, Shajing Street, Bao'an District, Shenzhen, Guangdong, China
Tel: +(86) 0755-82591330 | E-mail: webmaster@lcs-cert.com | Web: www.lcs-cert.com
Scan code to check authenticity